Ethernet DC/DC Converter EPC1012P & EPC1012H

Features

- 70 % Typical efficiency at full load†
- Enable Active : Low
- Regulated Output
- Input / Output Isolation
- Input filter to reduce input ripple current
- Designed for low common mode noise

Electrical Specifications

Notes : *Package with G = Surface Mount Device †@ nominial input voltage

PCA P/N	Standard Package	Optional Packages	Input Voltage V	Output Voltage V	Output Current mA Max.	Output Ripple & Noise @ 20 MHz BW mV p-p	Isolation Vrms
EPC1012P	E6	E6-G*,E7,E8	12 ± 10%	9 ± 5%	200 Max.	100 Max.	500
EPC1012H	E6	E6-G*,E8	12 ± 10%	9 ± 5%	200 Max.	100 Max.	2000

Pin Connections for E6

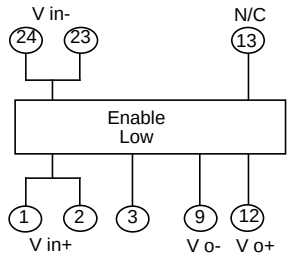

Pin Connections for E6-G

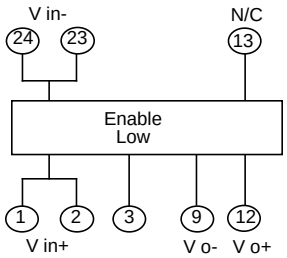

Pin Connections for E7

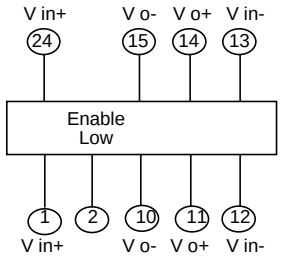

Pin Connections for E8

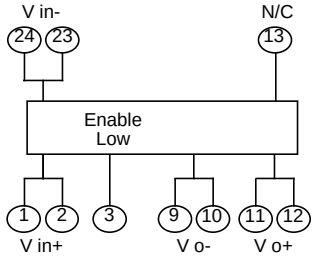

PACKAGE E6

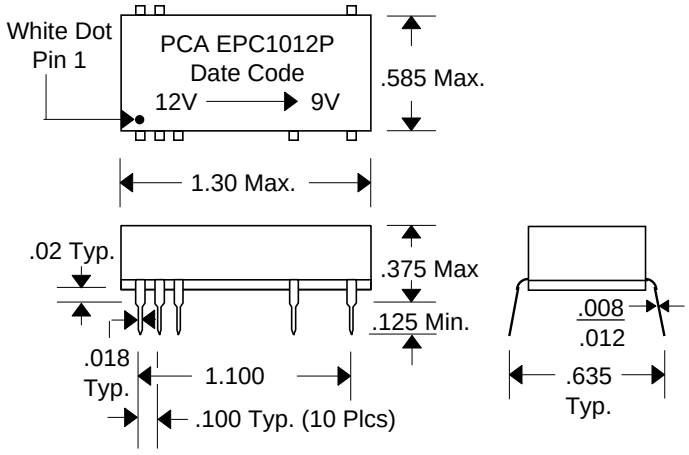

PACKAGE E6-G

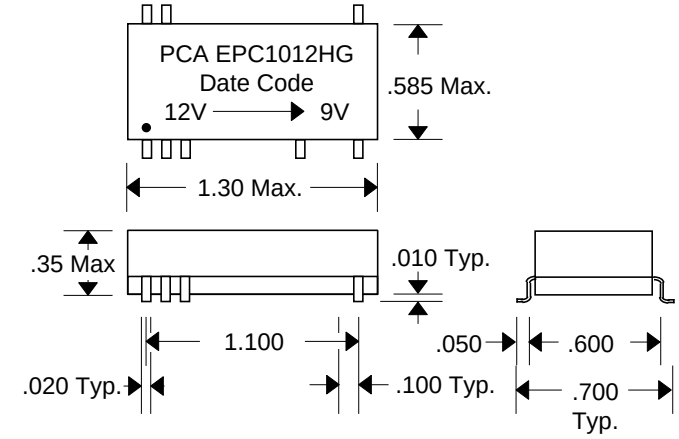

PACKAGE E7 Optional SMD Package Available

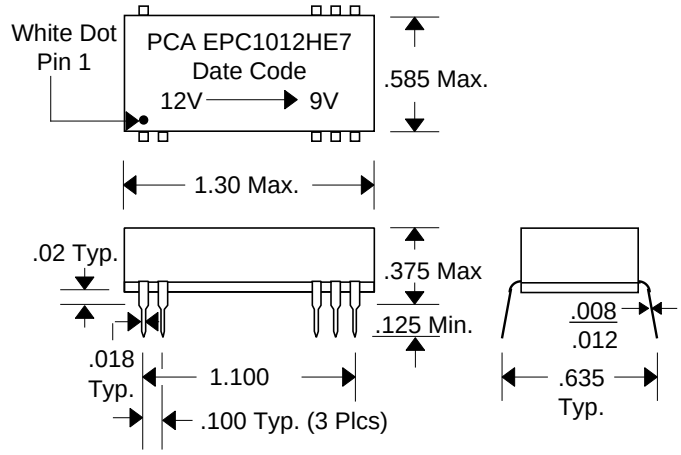

PAD LAYOUT

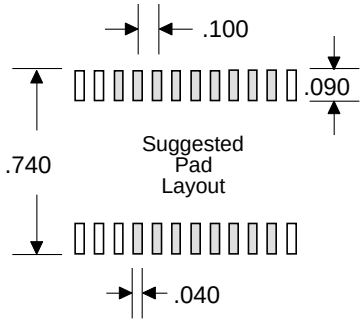

DSC1012 Rev 1 4/8/99

Unless Otherwise Noted Dimensions in Inches
Tolerances:
Fractional = ± 1/32
.XX = ± .030 .XXX = ± .010

PCA ELECTRONICS INC.

16799 SCHOENBORN ST.
NORTH HILLS, CA 91343
TEL: (818) 892-0761
FAX: (818) 894-5791

Downloaded from Elcodis.com electronic components distributor