Features

- Single Voltage Read/Write Operation: 2.65V to 3.6V
- Access Time – 70 ns
- Sector Erase Architecture
  - Sixty-three 32K Word (64K Bytes) Sectors with Individual Write Lockout
  - Eight 4K Word (8K Bytes) Sectors with Individual Write Lockout
- Fast Word Program Time – 12 µs
- Fast Sector Erase Time – 300 ms
- Suspend/Resume Feature for Erase and Program
  - Supports Reading and Programming from Any Sector by Suspending Erase of a Different Sector
  - Supports Reading Any Word by Suspending Programming of Any Other Word
- Low-power Operation
  - 12 mA Active
  - 13 µA Standby
- VPP Pin for Write Protection
- $\overline{\text{WP}}$ Pin for Sector Protection
- $\overline{\text{RESET}}$ Input for Device Initialization
- Flexible Sector Protection
- TSOP and CBGA Package Options
- Top or Bottom Boot Block Configuration Available
- 128-bit Protection Register
- Minimum 100,000 Erase Cycles
- Common Flash Interface (CFI)
- Green (Pb/Halide-free) Packaging Option

32-megabit (2M x 16) 3-volt Only Flash Memory

AT49BV320C AT49BV320CT

1. Description

The AT49BV320C(T) is a 2.7-volt 32-megabit Flash memory organized as 2,097,152 words of 16 bits each. The memory is divided into 71 sectors for erase operations. The device is offered in a 48-lead TSOP and a 47-ball CBGA package. The device has $\overline{\text{CE}}$ and $\overline{\text{OE}}$ control signals to avoid any bus contention. This device can be read or reprogrammed using a single power supply, making it ideally suited for in-system programming.

The device powers on in the read mode. Command sequences are used to place the device in other operation modes such as program and erase. The device has the capability to protect the data in any sector (see "Flexible Sector Protection" on page 6).

To increase the flexibility of the device, it contains an Erase Suspend and Program Suspend feature. This feature will put the erase or program on hold for any amount of time and let the user read data from or program data to any of the remaining sectors within the memory.

The VPP pin provides data protection. When the V_{PP} input is below 0.4V, the program and erase functions are inhibited. When V_{PP} is at 1.5V or above, normal program and erase operations can be performed.

3372F–FLASH–4/05

2. Pin Configurations

Pin Name	Function
A0 - A20	Addresses
$\overline{CE}$	Chip Enable
$\overline{OE}$	Output Enable
$\overline{WE}$	Write Enable
$\overline{RESET}$	Reset
VPP	Write Protection
I/O0 - I/O15	Data Inputs/Outputs
NC	No Connect
VCCQ	Output Power Supply
$\overline{WP}$	Write Protect

2.1 TSOP Top View (Type 1)

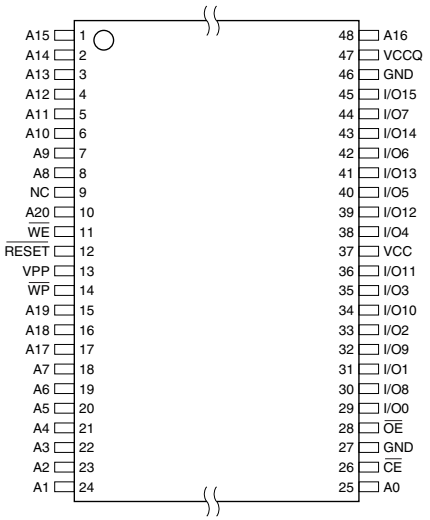

2.2 CBGA Top View (Ball Down)

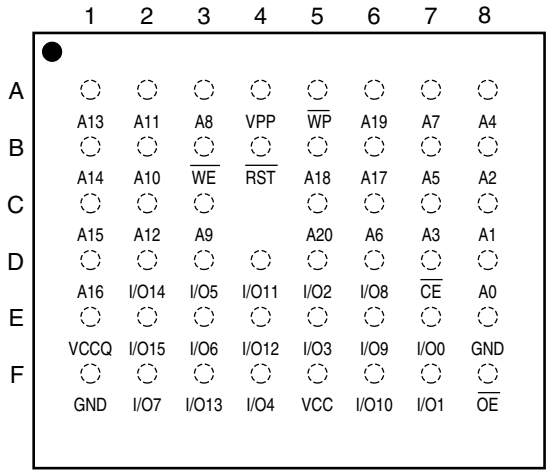

3. Block Diagram

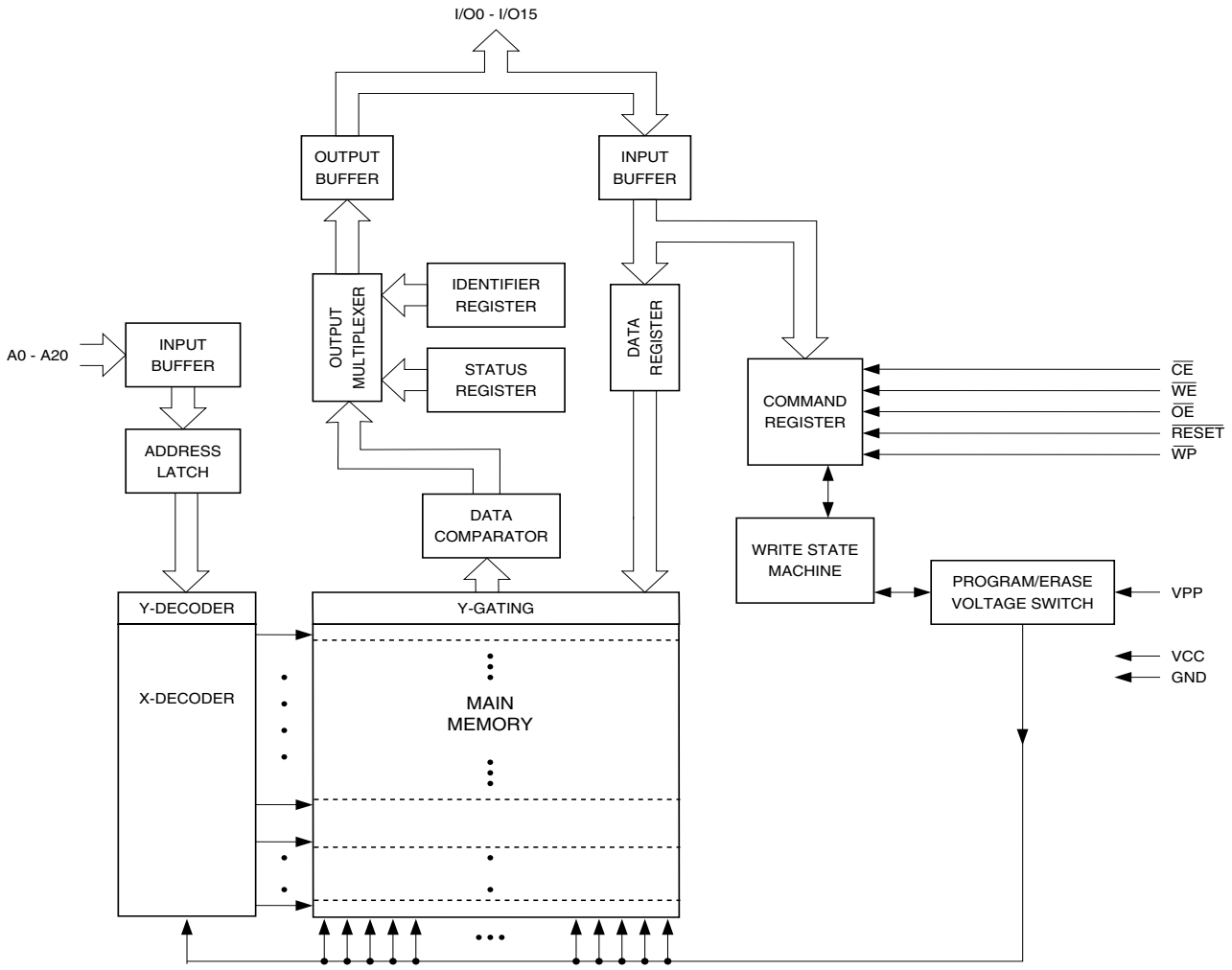

4. Device Operation

4.1 Read

When the AT49BV320C(T) is in the read mode, with $\overline{CE}$ and $\overline{OE}$ low and $\overline{WE}$ high, the data stored at the memory location determined by the address pins are asserted on the outputs. The outputs are put in the high impedance state whenever $\overline{CE}$ or $\overline{OE}$ is high. This dual-line control gives designers flexibility in preventing bus contention.

4.2 Command Sequences

When the device is first powered on, it will be in the read mode. In order to perform other device functions, a series of command sequences are entered into the device. The command sequences are shown in the "Command Definition Table" on page 15 (I/O8 - I/O15 are don't care inputs for the command codes). The command sequences are written by applying a low pulse on the $\overline{WE}$ or $\overline{CE}$ input with $\overline{CE}$ or $\overline{WE}$ low (respectively) and $\overline{OE}$ high. The address and data are latched by the first rising edge of $\overline{CE}$ or $\overline{WE}$. Standard microprocessor write timings are used.

The address locations used in the command sequences are not affected by entering the command sequences.

4.3 Reset

A $\overline{\text{RESET}}$ input pin is provided to ease some system applications. When $\overline{\text{RESET}}$ is at a logic high level, the device is in its standard operating mode. A low level on the $\overline{\text{RESET}}$ input halts the present device operation and puts the outputs of the device in a high impedance state. When a high level is reasserted on the $\overline{\text{RESET}}$ pin, the device returns to the read mode, depending upon the state of the control inputs.

4.4 Erasure

Before a word can be reprogrammed, it must be erased. The erased state of memory bits is a logical “1”. The individual sectors can be erased by using the Sector Erase command.

4.4.1 Sector Erase

The device is organized into 71 sectors (SA0 - SA70) that can be individually erased. The Sector Erase command is a two-bus cycle operation. The sector address and the D0H Data Input command are latched on the rising edge of $\overline{\text{WE}}$. The sector erase starts after the rising edge of $\overline{\text{WE}}$ of the second cycle provided the given sector has not been protected. The erase operation is internally controlled; it will automatically time to completion. The maximum time to erase a sector is t_{SEC}. An attempt to erase a sector that has been protected will result in the operation terminating immediately.

4.5 Word Programming

Once a memory sector is erased, it is programmed (to a logical “0”) on a word-by-word basis. Programming is accomplished via the Internal Device command register and is a two-bus cycle operation. The device will automatically generate the required internal program pulses.

Any commands written to the chip during the embedded programming cycle will be ignored. If a hardware reset happens during programming, the data at the location being programmed will be corrupted. Please note that a data “0” cannot be programmed back to a “1”; only erase operations can convert “0”s to “1”s. Programming is completed after the specified t_{BP} cycle time. If the program status bit is a “1”, the device was not able to verify that the program operation was performed successfully. The status register indicates the programming status. While the program sequence executes, status bit I/O7 is “0”. While programming, the only valid commands are Read Status Register, Program Suspend and Program Resume.

4.6 VPP Pin

The circuitry of the AT49BV320C(T) is designed so that the device cannot be programmed or erased if the V_{PP} voltage is less that 0.4V. When V_{PP} is at 1.5V or above, normal program and erase operations can be performed. The VPP pin cannot be left floating.

4.7 Read Status Register

The status register indicates the status of device operations and the success/failure of that operation. The Read Status Register command causes subsequent reads to output data from the status register until another command is issued. To return to reading from the memory, issue a Read command.

The status register bits are output on I/O7 - I/O0. The upper byte, I/O15 - I/O8, outputs 00H when a Read Status Register command is issued.

The contents of the status register [SR7:SR0] are latched on the falling edge of $\overline{OE}$ or $\overline{CE}$ (whichever occurs last), which prevents possible bus errors that might occur if status register contents change while being read. $\overline{CE}$ or $\overline{OE}$ must be toggled with each subsequent status read, or the status register will not indicate completion of a Program or Erase operation.

When the Write State Machine (WSM) is active, SR7 will indicate the status of the WSM; the remaining bits in the status register indicate whether the WSM was successful in performing the preferred operation (see Table 4-1).

Table 4-1. Status Register Bit Definition

WSMS	ESS	ES	PS	VPPS	PSS	SLS	R
7	6	5	4	3	2	1	0

	Notes
SR7 WRITE STATE MACHINE STATUS (WSMS) 1 = Ready 0 = Busy	Check Write State Machine bit first to determine Word Program or Sector Erase completion, before checking program or erase status bits.
SR6 = ERASE SUSPEND STATUS (ESS) 1 = Erase Suspended 0 = Erase In Progress/Completed	When Erase Suspend is issued, WSM halts execution and sets both WSMS and ESS bits to “1” – ESS bit remains set to “1” until an Erase Resume command is issued.
SR5 = ERASE STATUS (ES) 1 = Error in Sector Erase 0 = Successful Sector Erase	When this bit is set to “1”, WSM has applied the max number of erase pulses to the sector and is still unable to verify successful sector erasure.
SR4 = PROGRAM STATUS (PS) 1 = Error in Programming 0 = Successful Programming	When this bit is set to “1”, WSM has attempted but failed to program a word
SR3 = VPP STATUS (VPPS) 1 = VPP Low Detect, Operation Abort 0 = VPP OK	The V_{PP} status bit does not provide continuous indication of VPP level. The WSM interrogates V_{PP} level only after the Program or Erase command sequences have been entered and informs the system if V_{PP} has not been switched on. The V_{PP} is also checked before the operation is verified by the WSM.
SR2 = PROGRAM SUSPEND STATUS (PSS) 1 = Program Suspended 0 = Program in Progress/Completed	When Program Suspend is issued, WSM halts execution and sets both WSMS and PSS bits to “1”. PSS bit remains set to “1” until a Program Resume command is issued.
SR1 = SECTOR LOCK STATUS 1 = Prog/Erase attempted on a locked sector; Operation aborted. 0 = No operation to locked sectors	If a Program or Erase operation is attempted to one of the locked sectors, this bit is set by the WSM. The operation specified is aborted and the device is returned to read status mode.
SR0 = RESERVED FOR FUTURE ENHANCEMENTS (R)	This bit is reserved for future use and should be masked out when polling the status register.

Note: 1. A Command Sequence Error is indicated when SR1, SR3, SR4 and SR5 are set.

4.7.1 Clear Status Register

The WSM can set status register bits 1 through 7 and can clear bits 2, 6 and 7; but, the WSM cannot clear status register bits 1, 3, 4 or 5. Because bits 1, 3, 4 and 5 indicate various error conditions, these bits can be cleared only through the Clear Status Register command. By allowing the system software to control the resetting of these bits, several operations may be performed (such as cumulatively programming several addresses or erasing multiple sectors in sequence) before reading the status register to determine if an error occurred during those operations. The status register should be cleared before beginning another operation. The Read command must be issued before data can be read from the memory array. The status register can also be cleared by resetting the device.

4.8 Flexible Sector Protection

The AT49BV320C(T) offers two sector protection modes, the Softlock and the Hardlock. The Softlock mode is optimized as sector protection for sectors whose content changes frequently. The Hardlock protection mode is recommended for sectors whose content changes infrequently. Once either of these two modes is enabled, the contents of the selected sector is read-only and cannot be erased or programmed. Each sector can be independently programmed for either the Softlock or Hardlock sector protection mode. At power-up and reset, all sectors have their Softlock protection mode enabled.

4.8.1 Softlock and Unlock

The Softlock protection mode can be disabled by issuing a two-bus cycle Unlock command to the selected sector. Once a sector is unlocked, its contents can be erased or programmed. To enable the Softlock protection mode, a two-bus cycle Softlock command must be issued to the selected sector.

4.8.2 Hardlock and Write Protect

The Hardlock sector protection mode operates in conjunction with the Write Protect ($\overline{WP}$) pin. The Hardlock sector protection mode can be enabled by issuing a two-bus cycle Hardlock Software command to the selected sector. The state of the Write Protect pin affects whether the Hardlock protection mode can be overridden.

- When the $\overline{WP}$ pin is low and the Hardlock protection mode is enabled, the sector cannot be unlocked and the contents of the sector is read-only.
- When the $\overline{WP}$ pin is high, the Hardlock protection mode is overridden and the sector can be unlocked via the Unlock command.

To disable the Hardlock sector protection mode, the chip must be either reset or power cycled.

Table 4-2. Hardlock and Softlock Protection Configurations in Conjunction with $\overline{WP}$

V_{PP}	$\overline{WP}$	Hard-lock	Soft-lock	Erase/ Prog Allowed?	Comments
V_{CC}/5V	0	0	0	Yes	No sector is locked
V_{CC}/5V	0	0	1	No	Sector is Softlocked. The Unlock command can unlock the sector.
V_{CC}/5V	0	1	1	No	Hardlock protection mode is enabled. The sector cannot be unlocked.
V_{CC}/5V	1	0	0	Yes	No sector is locked.
V_{CC}/5V	1	0	1	No	Sector is Softlocked. The Unlock command can unlock the sector.
V_{CC}/5V	1	1	0	Yes	Hardlock protection mode is overridden and the sector is not locked.
V_{CC}/5V	1	1	1	No	Hardlock protection mode is overridden and the sector can be unlocked via the Unlock command.
V_{IL}	x	x	x	No	Erase and Program Operations cannot be performed.

Figure 4-1. Sector Locking State Diagram

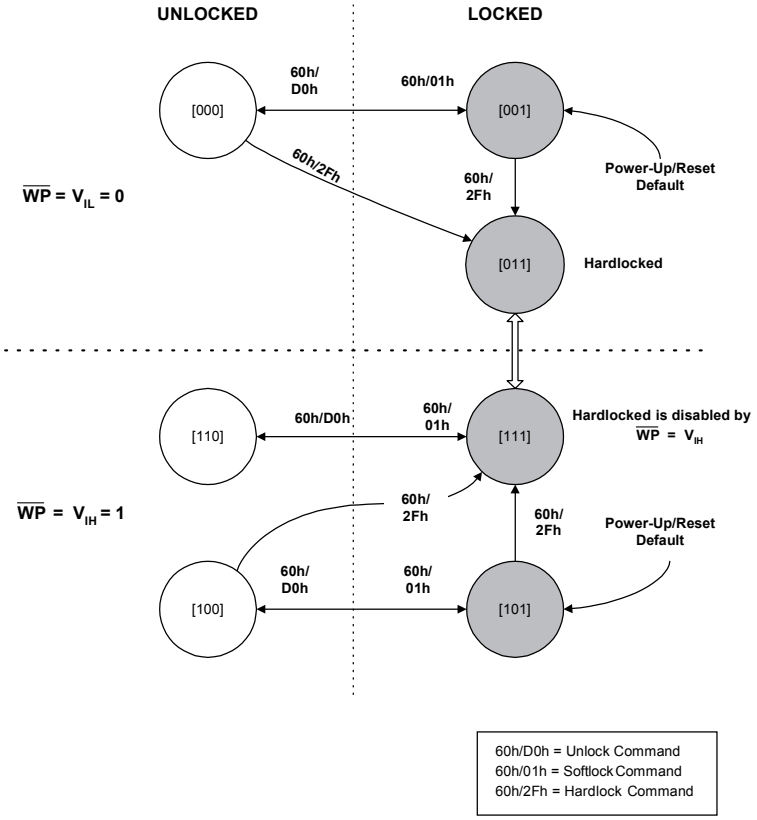

Note: 1. The notation [X, Y, Z] denotes the locking state of a sector. The current locking state of a sector is defined by the state of $\overline{WP}$ and the two bits of the sector-lock status D[1:0].

4.8.3 Sector Protection Detection

A software method is available to determine if the sector protection Softlock or Hardlock features are enabled. When the device is in the software product identification mode, a read from the I/O0 and I/O1 at address location 00002H within a sector will show if the sector is unlocked, soft-locked, or hardlocked.

Table 4-3. Sector Protection Status

I/O1	I/O0	Sector Protection Status
0	0	Sector Not Locked
0	1	Softlock Enabled
1	0	Hardlock Enabled
1	1	Both Hardlock and Softlock Enabled

4.9 Erase Suspend/Erase Resume

The Erase Suspend command allows the system to interrupt a sector erase operation and then program or read data from a different sector within the memory. After the Erase Suspend command is given, the device requires a maximum time of 15 µs to suspend the erase operation. After the erase operation has been suspended, the system can then read data or program data to any other sector within the device. An address is not required during the Erase Suspend command. During a sector erase suspend, another sector cannot be erased. To resume the sector erase operation, the system must write the Erase Resume command. The Erase Resume command is a one-bus cycle command. The only valid commands while erase is suspended are Read Status Register, Product ID Entry, CFI Query, Program, Program Resume, Erase Resume, Sector Softlock/Hardlock, Sector Unlock.

4.10 Program Suspend/Program Resume

The Program Suspend command allows the system to interrupt a programming operation and then read data from a different word within the memory. After the Program Suspend command is given, the device requires a maximum of 20 µs to suspend the programming operation. After the programming operation has been suspended, the system can then read data from any other word within the device. An address is not required during the program suspend operation. To resume the programming operation, the system must write the Program Resume command. The program suspend and resume are one-bus cycle commands. The command sequence for the erase suspend and program suspend are the same and the command sequence for the erase resume and program resume are the same. The only other valid commands while program is suspended are Read Status Register, Product ID Entry, CFI Query and Program Resume.

4.11 Product Identification

The product identification mode identifies the device and manufacturer as Atmel. It may be accessed by a software operation. For details, see “Operating Modes” on page 21.

4.12 128-bit Protection Register

The AT49BV320C(T) contains a 128-bit register that can be used for security purposes in system design. The protection register is divided into two 64-bit sectors. The two sectors are designated as sector A and sector B. The data in sector A is non-changeable and is programmed at the factory with a unique number. The data in sector B is programmed by the user and can be locked out such that data in the sector cannot be reprogrammed. To program sector

B in the protection register, the two-bus cycle Program Protection Register command must be used as shown in the "Command Definition Table" on page 15. To lock out sector B, the two-bus cycle Lock Protection Register command must be used as shown in the "Command Definition Table" . Data bit D1 must be zero during the second bus cycle. All other data bits during the second bus cycle are don't cares. To determine whether sector B is locked out, use the status of sector B protection command. If data bit D1 is zero, sector B is locked. If data bit D1 is one, sector B can be reprogrammed. Please see the "Protection Register Addressing Table" on page 16 for the address locations in the protection register. To read the protection register, the Product ID Entry command is given followed by a normal read operation from an address within the protection register. After determining whether sector B is protected or not, or reading the protection register, the Read command must be given to return to the read mode.

4.13 Common Flash Interface (CFI)

CFI is a published, standardized data structure that may be read from a flash device. CFI allows system software to query the installed device to determine the configurations, various electrical and timing parameters and functions supported by the device. CFI is used to allow the system to learn how to interface to the flash device most optimally. The two primary benefits of using CFI are ease of upgrading and second source availability. The command to enter the CFI Query mode is a one-bus cycle command which requires writing data 98h to any address. The CFI Query command can be written when the device is ready to read data or can also be written when the part is in the product ID mode. Once in the CFI Query mode, the system can read CFI data at the addresses given in "Common Flash Interface Definition Table" on page 27. To return to the read mode, issue the Read command.

4.14 Hardware Data Protection

The Hardware Data Protection feature protects against inadvertent programs to the AT49BV320C(T) in the following ways: (a) V_{CC} sense: if V_{CC} is below 1.8V (typical), the program function is inhibited. (b) V_{CC} power-on delay: once V_{CC} has reached the V_{CC} sense level, the device will automatically time out 10 ms (typical) before programming. (c) Program inhibit: holding any one of $\overline{OE}$ low, $\overline{CE}$ high or $\overline{WE}$ high inhibits program cycles. (d) Program inhibit: V_{PP} is less than V_{ILPP}. (e) V_{PP} power-on delay: once V_{PP} has reached 0.9V, program and erase operations are inhibited for 100 ns.

INPUT LEVELS: While operating with a 2.65V to 3.6V power supply, the address inputs and control inputs ($\overline{OE}$, $\overline{CE}$ and $\overline{WE}$) may be driven from 0 to 5.5V without adversely affecting the operation of the device. The I/O lines can only be driven from 0 to V_{CCQ} + 0.6V.

4.15 Output Levels

For the AT49BV320C(T), output high levels (V_{OH}) are equal to V_{CCQ} - 0.1V (not V_{CC}). For 2.65V - 3.6V output levels, V_{CCQ} must be tied to V_{CC}. For 1.8V - 2.2V output levels, V_{CCQ} must be regulated to 2.0V ± 10%, while V_{CC} must be regulated to 2.65V - 3.0V (for minimum power).

5. Word Program Flowchart

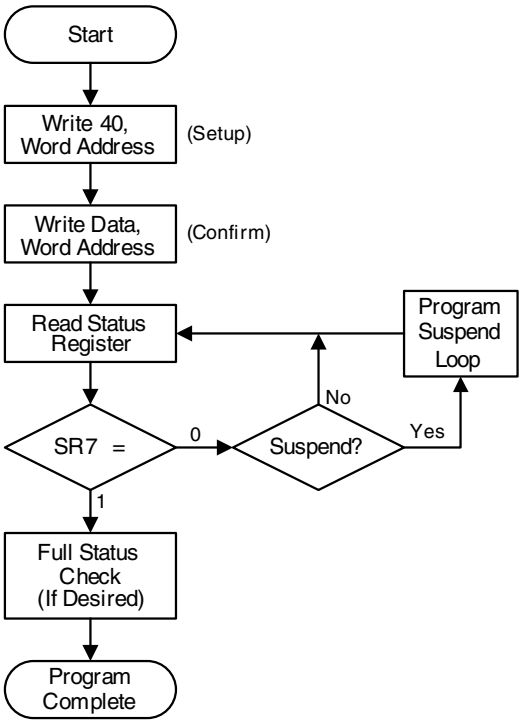

6. Word Program Procedure

Bus Operation	Command	Comments
Write	Program Setup	Data = 40 Addr = Location to program
Write	Data	Data = Data to program Addr = Location to program
Read	None	Status register data: Toggle $\overline{CE}$ or $\overline{OE}$ to update status register
Idle	None	Check SR7 1 = WSM Ready 0 = WSM Busy
Repeat for subsequent Word Program operations. Full status register check can be done after each program, or after a sequence of program operations. Write FF after the last operation to set to the Read state.		

7. Full Status Check Flowchart

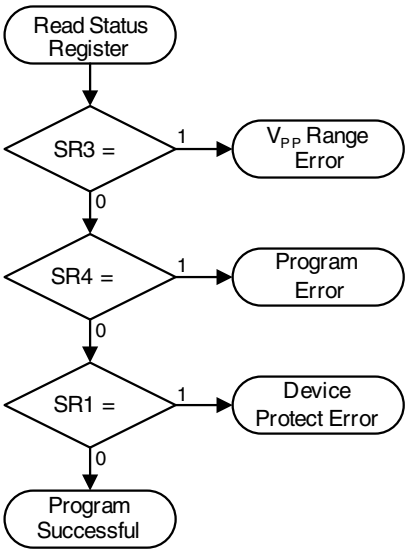

8. Full Status Check Procedure

Bus Operation	Command	Comments
Idle	None	Check SR3: 1 = V_{PP} Error
Idle	None	Check SR4: 1 = Data Program Error
Idle	None	Check SR1: 1 = Sector locked; operation aborted
SR3 MUST be cleared before the Write State Machine allows further program attempts. If an error is detected, clear the status register before continuing operations – only the Clear Status Register command clears the status register error bits.		

9. Program Suspend/Resume Flowchart

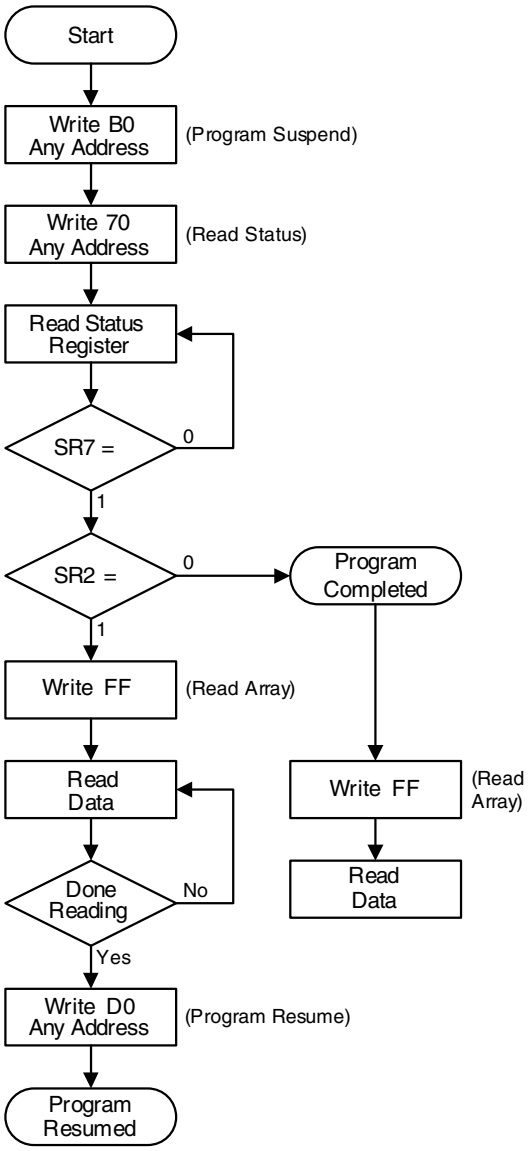

10. Program Suspend/Resume Procedure

Bus Operation	Command	Comments
Write	Read Status	Data = 70 Addr = Any address
Write	Program Suspend	Data = B0 Addr = Any address
Read	None	Status register data: Toggle $\overline{CE}$ or $\overline{OE}$ to update status register Addr = Any address
Idle	None	Check SR7 1 = WSM Ready 0 = WSM Busy
Idle	None	Check SR2 1 = Program suspended 0 = Program completed
Write	Read Array	Data = FF Addr = Any address
Read	None	Read data from any word in the memory
Write	Program Resume	Data = D0 Addr = Any address

11. Erase Suspend/Resume Flowchart

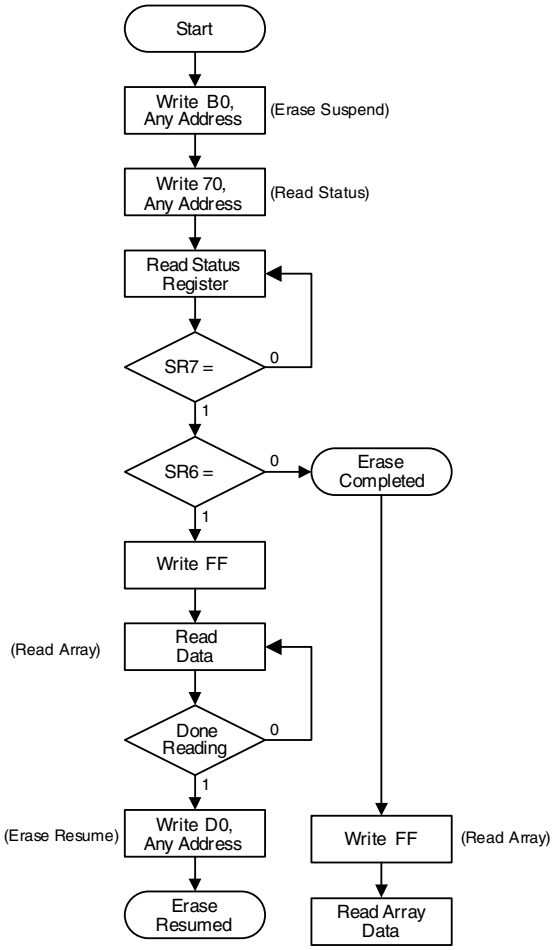

12. Erase Suspend/Resume Procedure

Bus Operation	Command	Comments
Write	Read Status	Data = 70 Addr = Any address
Write	Erase Suspend	Data = B0 Addr = Any address
Read	None	Status register data: Toggle $\overline{CE}$ or $\overline{OE}$ to update status register Addr = Any address
Idle	None	Check SR7 1 = WSM Ready 0 = WSM Busy
Idle	None	Check SR6 1 = Erase suspended 0 = Erase completed
Write	Read or Program	Data = FF or 40 Addr = Any address
Read or Write	None	Read or program data from/to sector other than the one being erased
Write	Program Resume	Data = D0 Addr = Any address

13. Sector Erase Flowchart

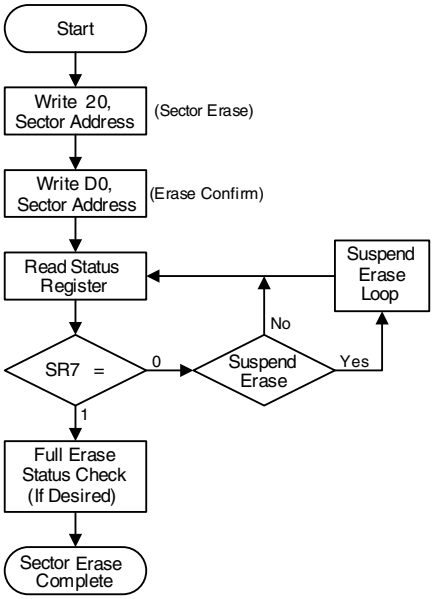

14. Sector Erase Procedure

Bus Operation	Command	Comments
Write	Sector Erase Setup	Data = 20 Addr = Sector to be erased (SA)
Write	Erase Confirm	Data = D0 Addr = Sector to be erased (SA)
Read	None	Status register data: Toggle $\overline{CE}$ or $\overline{OE}$ to update status register data
Idle	None	Check SR7 1 = WSM Ready 0 = WSM Busy
Repeat for subsequent sector erasures. Full status register check can be done after each sector erase, or after a sequence of sector erasures. Write FF after the last operation to enter read mode.		

15. Full Erase Status Check Flowchart

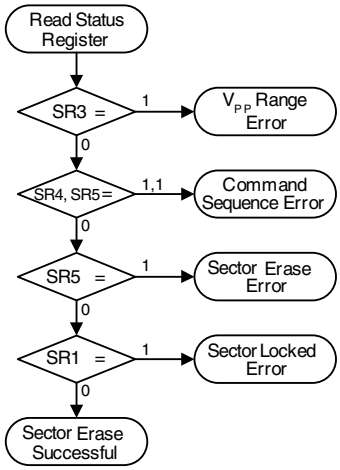

16. Full Erase Status Check Procedure

Bus Operation	Command	Comments
Idle	None	Check SR3: 1 = V_{PP} Range Error
Idle	None	Check SR4, SR5: Both 1 = Command Sequence Error
Idle	None	Check SR5: 1 = Sector Erase Error
Idle	None	Check SR1: 1 = Attempted erase of locked sector; erase aborted.
SR1, SR3 must be cleared before the Write State Machine allows further erase attempts. Only the Clear Status Register command clears SR1, SR3, SR4, SR5. If an error is detected, clear the status register before attempting an erase retry or other error recovery.		

17. Protection Register Programming Flowchart

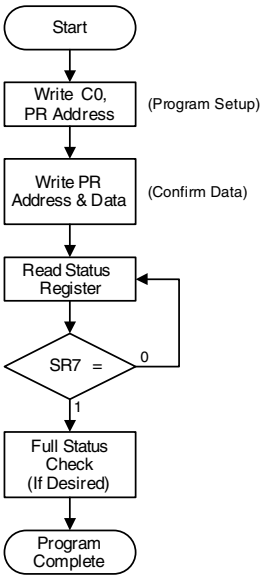

18. Protection Register Programming Procedure

Bus Operation	Command	Comments
Write	Program PR Setup	Data = C0 Addr = First Location to Program
Write	Protection Program	Data = Data to Program Addr = Location to Program
Read	None	Status register data: Toggle $\overline{CE}$ or $\overline{OE}$ to update status register data
Idle	None	Check SR7 1 = WSM Ready 0 = WSM Busy

Program Protection Register operation addresses must be within the protection register address space. Addresses outside this space will return an error.

Repeat for subsequent programming operations.

Full status register check can be done after each program, or after a sequence of program operations.

Write FF after the last operation to return to the Read mode.

19. Full Status Check Flowchart

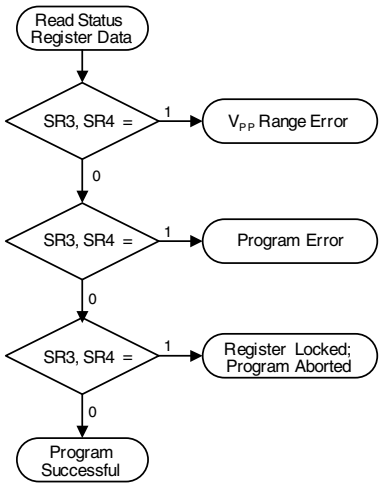

20. Full Status Check Procedure

Bus Operation	Command	Comments
Idle	None	Check SR1, SR3, SR4: 0,1,1 = V_{PP} Range Error
Idle	None	Check SR1, SR3, SR4: 0,0,1 = Programming Error
Idle	None	Check SR1, SR3, SR4: 1, 0,1 = Sector locked; operation aborted

SR3 must be cleared before the Write State Machine allows further program attempts.

Only the Clear Status Register command clears SR1, SR3, SR4.

If an error is detected, clear the status register before attempting a program retry or other error recovery.

21. Command Definition Table

Command Sequence	Bus Cycles	1st Bus Cycle		2nd Bus Cycle	
		Addr	Data	Addr	Data
Read	1	XX	FF		
Sector Erase/Confirm	2	XX	20	SA[2]	D0
Word Program	2	XX	40/10	Addr	D_{IN}
Erase/Program Suspend	1	XX	B0		
Erase/Program Resume	1	XX	D0		
Product ID Entry	1	XX	90		
Sector Softlock	2	XX	60	SA[2]	01
Sector Hardlock	2	XX	60	SA[2]	2F
Sector Unlock	2	XX	60	SA[2]	D0
Read Status Register	2	XX	70	XX	D_{OUT}[3]
Clear Status Register	1	XX	50		
Program Protection Register	2	XX	C0	Addr	D_{IN}
Lock Protection Register – Sector B	2	XX	C0	80	FFFD
Status of Sector B Protection	2	XX	90	80	D_{OUT}[4]
CFI Query	1	XX	98		

Notes:
1. The DATA FORMAT shown for each bus cycle is as follows; I/O7 - I/O0 (Hex). I/O15 - I/O8 are don't care. The ADDRESS FORMAT shown for each bus cycle is as follows: A7 - A0 (Hex). Address A20 through A8 are don't care.
2. SA = sector address. Any word address within a sector can be used to designate the sector address (see pages 17 and 20 for details).
3. The status register bits are output on I/O7 - I/O0.
4. If data bit D1 is "0", sector B is locked. If data bit D1 is "1", sector B can be reprogrammed.

22. Absolute Maximum Ratings*

Temperature under Bias ..... -55°C to +125°C

Storage Temperature ..... -65°C to +150°C

All Input Voltages
(including NC Pins)
with Respect to Ground .....-0.6V to +6.25V

All Output Voltages
with Respect to Ground .....-0.6V to V_{CC} + 0.6V

Voltage on V_{PP}
with Respect to Ground .....-0.6V to +13.0V

*NOTICE: Stresses beyond those listed under "Absolute Maximum Ratings" may cause permanent damage to the device. This is a stress rating only and functional operation of the device at these or any other conditions beyond those indicated in the operational sections of this specification is not implied. Exposure to absolute maximum rating conditions for extended periods may affect device reliability.

23. Protection Register Addressing Table

Word	Use	Sector	A7	A6	A5	A4	A3	A2	A1	A0
0	Factory	A	1	0	0	0	0	0	0	1
1	Factory	A	1	0	0	0	0	0	1	0
2	Factory	A	1	0	0	0	0	0	1	1
3	Factory	A	1	0	0	0	0	1	0	0
4	User	B	1	0	0	0	0	1	0	1
5	User	B	1	0	0	0	0	1	1	0
6	User	B	1	0	0	0	0	1	1	1
7	User	B	1	0	0	0	1	0	0	0

Note: All address lines not specified in the above table must be “0” when accessing the protection register, i.e., A20 - A8 = 0.

24. AT49BV320C – Sector Address Table

Sector	Size (Bytes/Words)	Address Range (A20 - A0)
SA0	8K/4K	00000 - 00FFF
SA1	8K/4K	01000 - 01FFF
SA2	8K/4K	02000 - 02FFF
SA3	8K/4K	03000 - 03FFF
SA4	8K/4K	04000 - 04FFF
SA5	8K/4K	05000 - 05FFF
SA6	8K/4K	06000 - 06FFF
SA7	8K/4K	07000 - 07FFF
SA8	64K/32K	08000 - 0FFFF
SA9	64K/32K	10000 - 17FFF
SA10	64K/32K	18000 - 1FFFF
SA11	64K/32K	20000 - 27FFF
SA12	64K/32K	28000 - 2FFFF
SA13	64K/32K	30000 - 37FFF
SA14	64K/32K	38000 - 3FFFF
SA15	64K/32K	40000 - 47FFF
SA16	64K/32K	48000 - 4FFFF
SA17	64K/32K	50000 - 57FFF
SA18	64K/32K	58000 - 5FFFF
SA19	64K/32K	60000 - 67FFF
SA20	64K/32K	68000 - 6FFFF
SA21	64K/32K	70000 - 77FFF
SA22	64K/32K	78000 - 7FFFF
SA23	64K/32K	80000 - 87FFF
SA24	64K/32K	88000 - 8FFFF
SA25	64K/32K	90000 - 97FFF
SA26	64K/32K	98000 - 9FFFF
SA27	64K/32K	A0000 - A7FFF
SA28	64K/32K	A8000 - AFFFF
SA29	64K/32K	B0000 - B7FFF
SA30	64K/32K	B8000 - BFFFF
SA31	64K/32K	C0000 - C7FFF
SA32	64K/32K	C8000 - CFFFF
SA33	64K/32K	D0000 - D7FFF
SA34	64K/32K	D8000 - DFFFF
SA35	64K/32K	E0000 - E7FFF
SA36	64K/32K	E8000 - EFFFF
SA37	64K/32K	F0000 - F7FFF

24. AT49BV320C – Sector Address Table (Continued)

Sector	Size (Bytes/Words)	Address Range (A20 - A0)
SA38	64K/32K	F8000 - FFFFF
SA39	64K/32K	100000 - 107FFF
SA40	64K/32K	108000 - 10FFFF
SA41	64K/32K	110000 - 117FFF
SA42	64K/32K	118000 - 11FFFF
SA43	64K/32K	120000 - 127FFF
SA44	64K/32K	128000 - 12FFFF
SA45	64K/32K	130000 - 137FFF
SA46	64K/32K	138000 - 13FFFF
SA47	64K/32K	140000 - 147FFF
SA48	64K/32K	148000 - 14FFFF
SA49	64K/32K	150000 - 157FFF
SA50	64K/32K	158000 - 15FFFF
SA51	64K/32K	160000 - 167FFF
SA52	64K/32K	168000 - 16FFFF
SA53	64K/32K	170000 - 177FFF
SA54	64K/32K	178000 - 17FFFF
SA55	64K/32K	180000 - 187FFF
SA56	64K/32K	188000 - 18FFFF
SA57	64K/32K	190000 - 197FFF
SA58	64K/32K	198000 - 19FFFF
SA59	64K/32K	1A0000 - 1A7FFF
SA60	64K/32K	1A8000 - 1AFFFF
SA61	64K/32K	1B0000 - 1B7FFF
SA62	64K/32K	1B8000 - 1BFFFF
SA63	64K/32K	1C0000 - 1C7FFF
SA64	64K/32K	1C8000 - 1CFFFF
SA65	64K/32K	1D0000 - 1D7FFF
SA66	64K/32K	1D8000 - 1DFFFF
SA67	64K/32K	1E0000 - 1E7FFF
SA68	64K/32K	1E8000 - 1EFFFF
SA69	64K/32K	1F0000 -1F7FFF
SA70	64K/32K	1F8000 - 1FFFF

25. AT49BV320CT – Sector Address Table

Sector	Size (Bytes/Words)	Address Range (A20 - A0)
SA0	64K/32K	00000 - 07FFF
SA1	64K/32K	08000 - 0FFFF
SA2	64K/32K	10000 - 17FFF
SA3	64K/32K	18000 - 1FFFF
SA4	64K/32K	20000 - 27FFF
SA5	64K/32K	28000 - 2FFFF
SA6	64K/32K	30000 - 37FFF
SA7	64K/32K	38000 - 3FFFF
SA8	64K/32K	40000 - 47FFF
SA9	64K/32K	48000 - 4FFFF
SA10	64K/32K	50000 - 57FFF
SA11	64K/32K	58000 - 5FFFF
SA12	64K/32K	60000 - 67FFF
SA13	64K/32K	68000 - 6FFFF
SA14	64K/32K	70000 - 77FFF
SA15	64K/32K	78000 - 7FFFF
SA16	64K/32K	80000 - 87FFF
SA17	64K/32K	88000 - 8FFFF
SA18	64K/32K	90000 - 97FFF
SA19	64K/32K	98000 - 9FFFF
SA20	64K/32K	A0000 - A7FFF
SA21	64K/32K	A8000 - AFFFF
SA22	64K/32K	B0000 - B7FFF
SA23	64K/32K	B8000 - BFFFF
SA24	64K/32K	C0000 - C7FFF
SA25	64K/32K	C8000 - CFFFF
SA26	64K/32K	D0000 - D7FFF
SA27	64K/32K	D8000 - DFFFF
SA28	64K/32K	E0000 - E7FFF
SA29	64K/32K	E8000 - EFFFF
SA30	64K/32K	F0000 - F7FFF
SA31	64K/32K	F8000 - FFFFF
SA32	64K/32K	100000 - 107FFF
SA33	64K/32K	108000 - 10FFFF
SA34	64K/32K	110000 - 117FFF
SA35	64K/32K	118000 - 11FFFF
SA36	64K/32K	120000 - 127FFF
SA37	64K/32K	128000 - 12FFFF

25. AT49BV320CT – Sector Address Table (Continued)

Sector	Size (Bytes/Words)	Address Range (A20 - A0)
SA38	64K/32K	130000 - 137FFF
SA39	64K/32K	138000 - 13FFFF
SA40	64K/32K	140000 - 147FFF
SA41	64K/32K	148000 - 14FFFF
SA42	64K/32K	150000 - 157FFF
SA43	64K/32K	158000 - 15FFFF
SA44	64K/32K	160000 - 167FFF
SA45	64K/32K	168000 - 16FFFF
SA46	64K/32K	170000 - 177FFF
SA47	64K/32K	178000 - 17FFFF
SA48	64K/32K	180000 - 187FFF
SA49	64K/32K	188000 - 18FFFF
SA50	64K/32K	190000 - 197FFF
SA51	64K/32K	198000 - 19FFFF
SA52	64K/32K	1A0000 - 1A7FFF
SA53	64K/32K	1A8000 - 1AFFFF
SA54	64K/32K	1B0000 - 1B7FFF
SA55	64K/32K	1B8000 - 1BFFFF
SA56	64K/32K	1C0000 - 1C7FFF
SA57	64K/32K	1C8000 - 1CFFFF
SA58	64K/32K	1D0000 - 1D7FFF
SA59	64K/32K	1D8000 - 1DFFFF
SA60	64K/32K	1E0000 - 1E7FFF
SA61	64K/32K	1E8000 - 1EFFFF
SA62	64K/32K	1F0000 - 1F7FFF
SA63	8K/4K	1F8000 - 1F8FFF
SA64	8K/4K	1F9000 - 1F9FFF
SA65	8K/4K	1FA000 - 1FAFFF
SA66	8K/4K	1FB000 - 1FBFFF
SA67	8K/4K	1FC000 - 1FCFFF
SA68	8K/4K	1FD000 - 1FDFFF
SA69	8K/4K	1FE000 - 1FEFFF
SA70	8K/4K	1FF000 - 1FFFFF

26. DC and AC Operating Range

		AT49BV320C(T)-70
Operating Temperature (Case)	Ind.	-40°C - 85°C
V_{CC} Power Supply		2.65V to 3.6V

27. Operating Modes

Mode	$\overline{CE}$	$\overline{OE}$	$\overline{WE}$	$\overline{RESET}$	V_{PP}	Ai	I/O
Read	V_{IL}	V_{IL}	V_{IH}	V_{IH}	X	Ai	D_{OUT}
Program/Erase(2)	V_{IL}	V_{IH}	V_{IL}	V_{IH}	V_{IHPP}(5)	Ai	D_{IN}
Standby/Program Inhibit	V_{IH}	X(1)	X	V_{IH}	X	X	High-Z
Program Inhibit	X	X	V_{IH}	V_{IH}	X		
	X	V_{IL}	X	V_{IH}	X		
	X	X	X	V_{IH}	V_{ILPP}(6)		
Output Disable	X	V_{IH}	X	V_{IH}	X		High-Z
Reset	X	X	X	V_{IL}	X	X	High-Z
Product Identification Software				V_{IH}		A0 = V_{IL}, A1 - A20 = V_{IL}	Manufacturer Code(4)
						A0 = V_{IH}, A1 - A20 = V_{IL}	Device Code(4)

Notes:
1. X can be V_{IL} or V_{IH}.
2. Refer to AC programming waveforms on page 26.
3. V_H = 12.0V ± 0.5V.
4. Manufacturer Code: 001FH, Device Code: 88C5H – AT49BV320C; 88C4H – AT49BV320CT
5. V_{IHPP} (min) = 0.9V; V_{IHPP} (max) = 1.95V.
6. V_{ILPP} (max) = 0.4V.

28. DC Characteristics

Symbol	Parameter	Condition	Min	Typ	Max	Units
I_{LI}	Input Load Current	V_{IN} = 0V to V_{CC}			10	µA
I_{LO}	Output Leakage Current	$V_{I/O}$ = 0V to V_{CC}			10	µA
I_{SB}	V_{CC} Standby Current CMOS	$\overline{CE}$ = V_{CC} - 0.3V to V_{CC}		13	25	µA
I_{CC} (1)	V_{CC} Active Read Current	f = 5 MHz; I_{OUT} = 0 mA		12	25	mA
I_{CC1}	V_{CC} Programming Current				45	mA
I_{PP1}	V_{PP} Input Load Current				10	µA
V_{IL}	Input Low Voltage				0.4	V
V_{IH}	Input High Voltage		V_{CCQ} - 0.2			V
V_{OL}	Output Low Voltage	I_{OL} = 100 µA			0.10	V
V_{OH}	Output High Voltage	I_{OH} = -100 µA	V_{CCQ} - 0.1			V

Note: 1. In the erase mode, I_{CC} is 65 mA.

29. AC Read Characteristics

Symbol	Parameter	AT49BV320C(T)-70		Units
		Min	Max	
t_{RC}	Read Cycle Time	70		ns
t_{ACC}	Address to Output Delay		70	ns
t_{CE} (1)	$\overline{CE}$ to Output Delay		70	ns
t_{OE} (2)	$\overline{OE}$ to Output Delay	0	20	ns
t_{DF} (3)(4)	$\overline{CE}$ or $\overline{OE}$ to Output Float	0	25	ns
t_{OH}	Output Hold from $\overline{OE}$, $\overline{CE}$ or Address, whichever occurred first	0		ns
t_{RO}	$\overline{RESET}$ to Output Delay		100	ns
t_{RLH}	$\overline{RESET}$ Low to High Time		300	ns

30. AC Read Waveforms(1)(2)(3)(4)

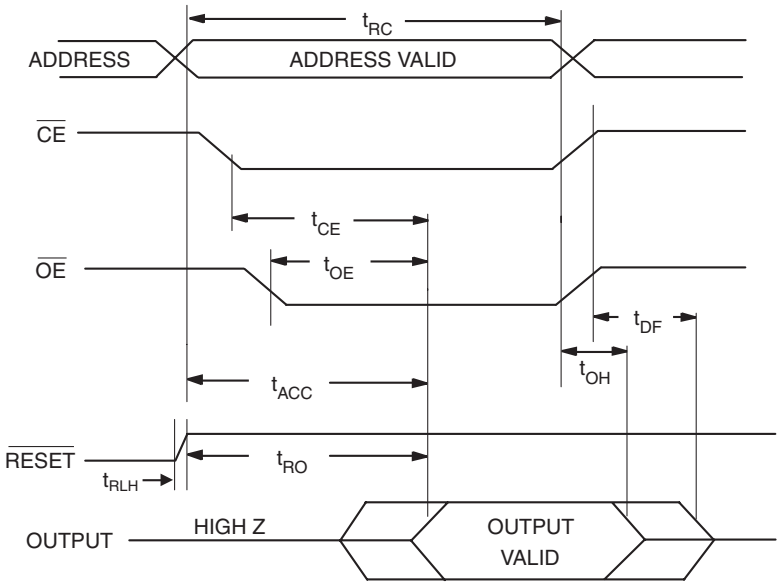

Notes:
1. $\overline{CE}$ may be delayed up to t_{ACC} - t_{CE} after the address transition without impact on t_{ACC}.
2. $\overline{OE}$ may be delayed up to t_{CE} - t_{OE} after the falling edge of $\overline{CE}$ without impact on t_{CE} or by t_{ACC} - t_{OE} after an address change without impact on t_{ACC}.
3. t_{DF} is specified from $\overline{OE}$ or $\overline{CE}$, whichever occurs first (CL = 5 pF).
4. This parameter is characterized and is not 100% tested.

31. Input Test Waveforms and Measurement Level

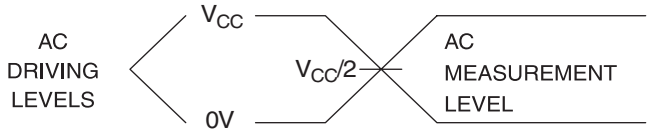

t_R, t_F < 5 ns

32. Output Test Load

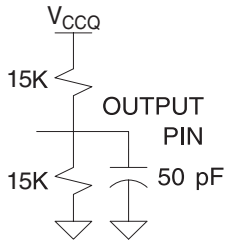

33. Pin Capacitance

f = 1 MHz, T = 25°C(1)

Symbol	Typ	Max	Units	Conditions
C_{IN}	4	6	pF	V_{IN} = 0V
C_{OUT}	8	12	pF	V_{OUT} = 0V

Note: This parameter is characterized and is not 100% tested.

34. AC Word Load Characteristics

Symbol	Parameter	Min	Max	Units
t_{AS}, t_{OES}	Address, $\overline{OE}$ Setup Time	45		ns
t_{AH}	Address Hold Time	0		ns
t_{CS}	Chip Select Setup Time	0		ns
t_{CH}	Chip Select Hold Time	0		ns
t_{WP}	Write Pulse Width ($\overline{WE}$ or $\overline{CE}$)	40		ns
t_{DS}	Data Setup Time	45		ns
t_{DH}, t_{OEH}	Data, $\overline{OE}$ Hold Time	0		ns
t_{WPH}	Write Pulse Width High	30		ns

35. AC Word Load Waveforms

35.1 $\overline{WE}$ Controlled

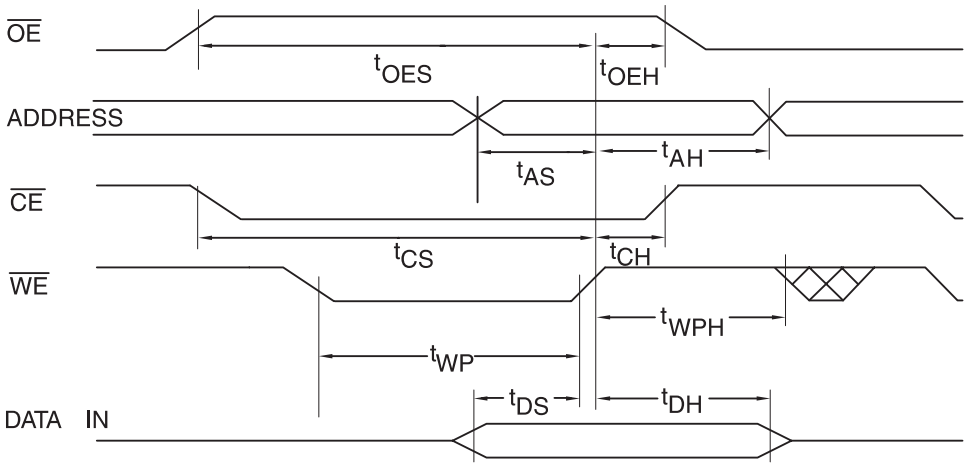

35.2 $\overline{CE}$ Controlled

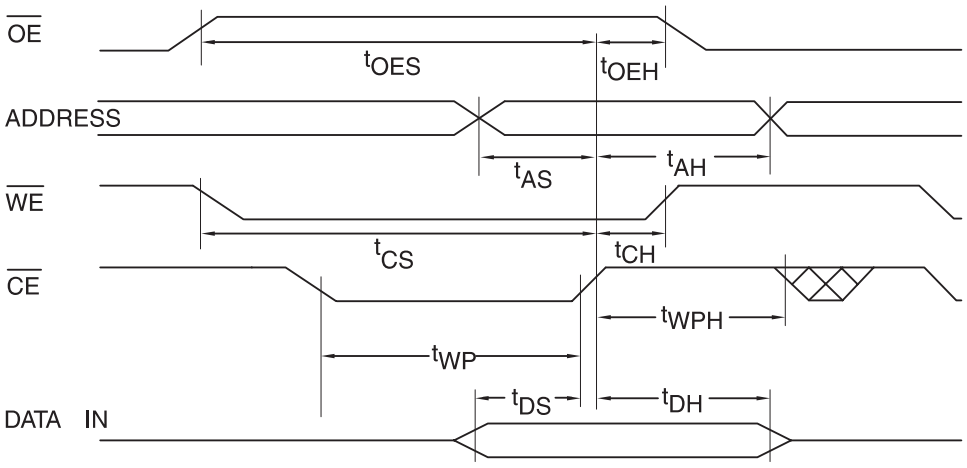

36. Program Cycle Characteristics

Symbol	Parameter	Min	Typ	Max	Units
t_{BP}	Word Programming Time		12	120	µs
t_{AS}	Address Setup Time	45			ns
t_{AH}	Address Hold Time	0			ns
t_{DS}	Data Setup Time	45			ns
t_{DH}	Data Hold Time	0			ns
t_{WP}	Write Pulse Width	40			ns
t_{WPH}	Write Pulse Width High	30			ns
t_{WC}	Write Cycle Time	70			ns
t_{RP}	$\overline{\text{Reset}}$ Pulse Width	500			ns
t_{SEC1}	Sector Erase Cycle Time (4K Word Sectors)		0.3	3.0	seconds
t_{SEC2}	Sector Erase Cycle Time (32K Word Sectors)		0.8	6.0	seconds
t_{ES}	Erase Suspend Time			15	µs
t_{PS}	Program Suspend Time			20	µs

37. Program Cycle Waveforms

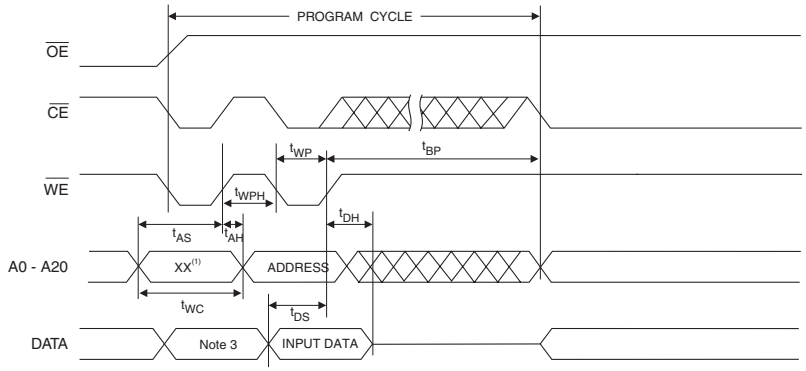

38. Sector Erase Cycle Waveforms

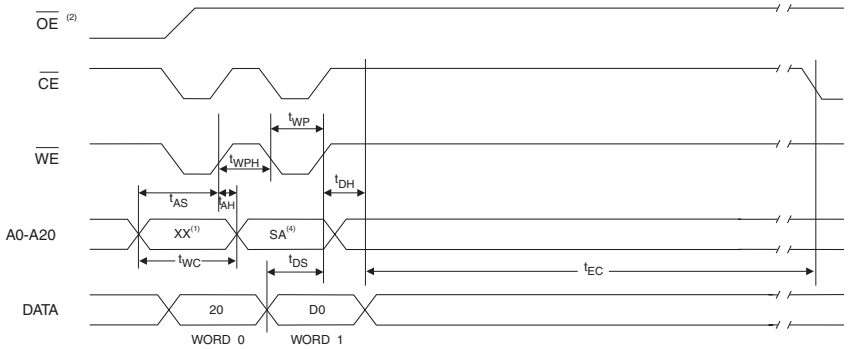

Notes:
1. Any address can be used to load the data.
2. $\overline{\text{OE}}$ must be high only when $\overline{\text{WE}}$ and $\overline{\text{CE}}$ are both low.
3. The data can be 40H or 10H.
4. The address depends on what sector is to be erased.

39. Common Flash Interface Definition Table

Address	AT49BV320CT	AT49BV320C	Comments
10h	0051h	0051h	
11h	0052h	0052h	“R”
12h	0059h	0059h	“Y”
13h	0003h	0003h	
14h	0000h	0000h	
15h	0041h	0041h	
16h	0000h	0000h	
17h	0000h	0000h	
18h	0000h	0000h	
19h	0000h	0000h	
1Ah	0000h	0000h	
1Bh	0027h	0027h	VCC min write/erase
1Ch	0036h	0036h	VCC max write/erase
1Dh	00B5h	00B5h	VPP min voltage
1Eh	00C5h	00C5h	VPP max voltage
1Fh	0004h	0004h	Typ word write – 12 µs
20h	0000h	0000h	
21h	000Ah	000Ah	Typ sector erase, 1,000 ms
22h	0000h	0000h	Typ chip erase, not supported
23h	0003h	0003h	Max word write/typ time
24h	0000h	0000h	n/a
25h	0003h	0003h	Max sector erase/typ sector erase
26h	0000h	0000h	Max chip erase/ typ chip erase
27h	0016h	0016h	Device size
28h	0001h	0001h	x16 device
29h	0000h	0000h	x16 device
2Ah	0000h	0000h	Multiple byte write not supported
2Bh	0000h	0000h	Multiple byte write not supported
2Ch	0002h	0002h	2 regions, x = 2
2Dh	003Eh	0007h	64K bytes, Y = 62 (Top); 8K bytes, Y = 7 (Bottom)
2Eh	0000h	0000h	64K bytes, Y = 62 (Top); 8K bytes, Y = 7 (Bottom)
2Fh	0000h	0020h	64K bytes, Z = 256 (Top); 8K bytes, Z = 32 (Bottom)
30h	0001h	0000h	64K bytes, Z = 256 (Top); 8K bytes, Z = 32 (Bottom)
31h	0007h	003Eh	8K bytes, Y = 7 (Top); 64K bytes, Y = 62 (Bottom)
32h	0000h	0000h	8K bytes, Y = 7 (Top); 64K bytes, Y = 62 (Bottom)
33h	0020h	0000h	8K bytes, Z = 32 (Top); 64K bytes, Z = 256 (Bottom)
34h	0000h	0001h	8K bytes, Z = 32 (Top); 64K bytes, Z = 256 (Bottom)

39. Common Flash Interface Definition Table (Continued)

Address	AT49BV320CT	AT49BV320C	Comments
VENDOR SPECIFIC EXTENDED QUERY			
41h	0050h	0050h	“P”
42h	0052h	0052h	“R”
43h	0049h	0049h	“I”
44h	0031h	0031h	Major version number, ASCII
45h	0030h	0030h	Minor version number, ASCII
46h	0086h	0086h	Bit 0 – chip erase supported, 0 – no, 1 – yes Bit 1 – erase suspend supported, 0 – no, 1 – yes Bit 2 – program suspend supported, 0 – no, 1 – yes Bit 3 – simultaneous operations supported, 0 – no, 1 – yes Bit 4 – burst mode read supported, 0 – no, 1 – yes Bit 5 – page mode read supported, 0 – no, 1 – yes Bit 6 – queued erase supported, 0 – no, 1 – yes Bit 7 – protection bits supported, 0 – no, 1 – yes
47h	0000h	0001h	Bit 8 – top (“0”) or bottom (“1”) boot sector device undefined bits are “0”
48h	0000h	0000h	Bit 0 – 4 word linear burst with wrap around, 0 – no, 1 – yes Bit 1 – 8 word linear burst with wrap around, 0 – no, 1 – yes Bit 2 – continuos burst, 0 - no, 1 - yes Undefined bits are “0”
49h	0000h	0000h	Bit 0 – 4 word page, 0 – no, 1 – yes Bit 1 – 8 word page, 0 – no, 1 – yes Undefined bits are “0”
4Ah	0080h	0080h	Location of protection register lock byte, the section’s first byte
4Bh	0003h	0003h	# of bytes in the factory prog section of prot register – 2*n
4Ch	0003h	0003h	# of bytes in the user prog section of prot register – 2*n

40. Ordering Information

40.1 Standard Package

t_{ACC} (ns)	I_{CC} (mA)		Ordering Code	Package	Operation Range
	Active	Standby			
70	25	0.025	AT49BV320C-70CI AT49BV320C-70TI	47C1 48T	Industrial (-40° to 85°C)
70	25	0.025	AT49BV320CT-70CI AT49BV320CT-70TI	47C1 48T	Industrial (-40° to 85°C)

40.2 Green Package Option (Pb/Halide-free)

t_{ACC} (ns)	I_{CC} (mA)		Ordering Code	Package	Operation Range
	Active	Standby			
70	25	0.025	AT49BV320C-70TU	48T	Industrial (-40° to 85°C)

Package Type	
47C1	47-ball, Plastic Chip-Size Ball Grid Array Package (CBGA)
48T	48-lead, Plastic Thin Small Outline Package (TSOP)

41. Packaging Information

41.1 47C1 – CBGA

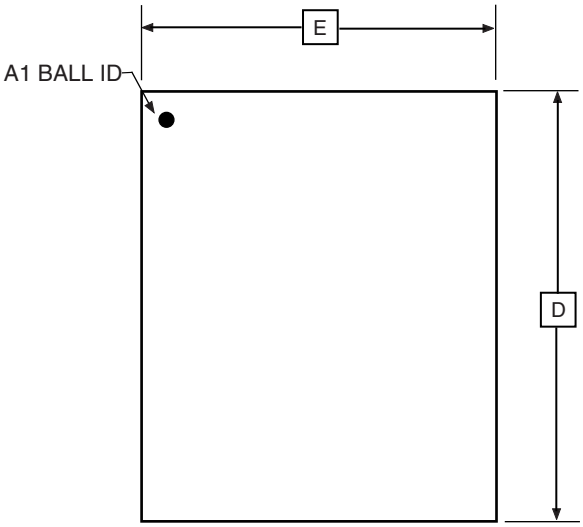

TOP VIEW

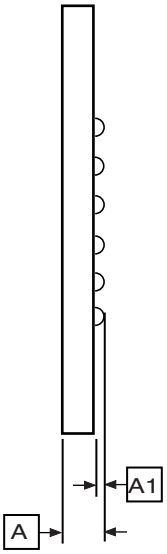

SIDE VIEW

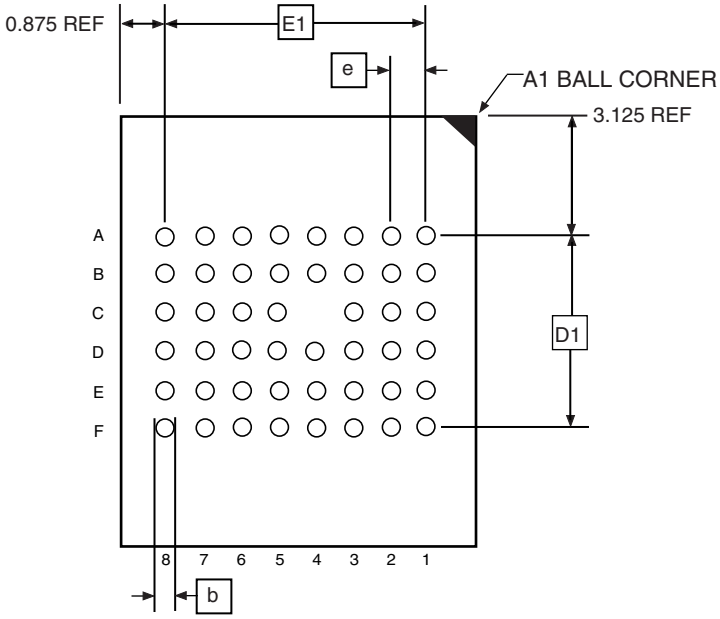

BOTTOM VIEW

COMMON DIMENSIONS
(Unit of Measure = mm)

SYMBOL	MIN	NOM	MAX	NOTE
E	6.90	7.00	7.10	
E1		5.25 TYP		
D	9.90	10.00	10.10	
D1		3.75 TYP		
A	–	–	1.00	
A1	0.22	–	–	
e		0.75 BSC		
b		0.35 TYP		

7/2/03

	TITLE	DRAWING NO.	REV.
2325 Orchard Parkway San Jose, CA 95131	**47C1**, 47-ball (8 x 6 Array), 0.75 mm Pitch, 7.0 x 10.0 x 1.0 mm Chip-scale Ball Grid Array Package (CBGA)	47C1	A

41.2 48T – TSOP

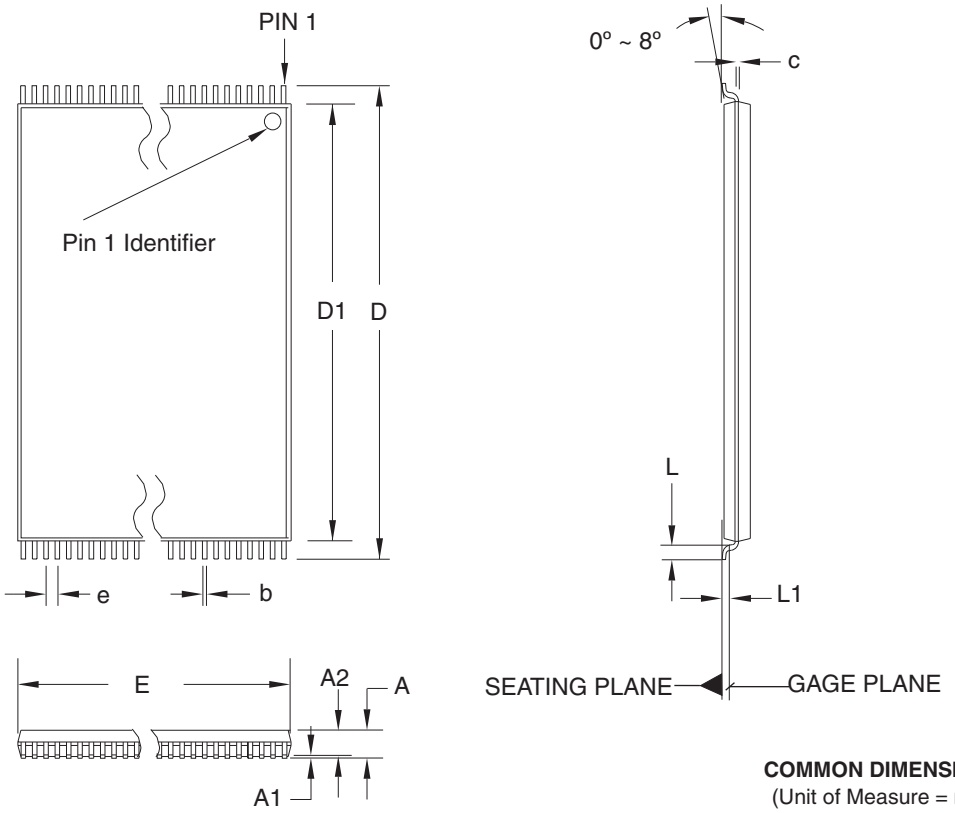

COMMON DIMENSIONS
(Unit of Measure = mm)

SYMBOL	MIN	NOM	MAX	NOTE
A	–	–	1.20	
A1	0.05	–	0.15	
A2	0.95	1.00	1.05	
D	19.80	20.00	20.20	
D1	18.30	18.40	18.50	Note 2
E	11.90	12.00	12.10	Note 2
L	0.50	0.60	0.70	
L1	0.25 BASIC			
b	0.17	0.22	0.27	
c	0.10	–	0.21	
e	0.50 BASIC			

Notes:
1. This package conforms to JEDEC reference MO-142, Variation DD.
2. Dimensions D1 and E do not include mold protrusion. Allowable protrusion on E is 0.15 mm per side and on D1 is 0.25 mm per side.
3. Lead coplanarity is 0.10 mm maximum.

10/18/01

	TITLE	DRAWING NO.	REV.
2325 Orchard Parkway San Jose, CA 95131	**48T**, 48-lead (12 x 20 mm Package) Plastic Thin Small Outline Package, Type I (TSOP)	48T	B

Atmel Corporation

2325 Orchard Parkway
San Jose, CA 95131, USA
Tel: 1(408) 441-0311
Fax: 1(408) 487-2600

Regional Headquarters

Europe
Atmel Sarl
Route des Arsenaux 41
Case Postale 80
CH-1705 Fribourg
Switzerland
Tel: (41) 26-426-5555
Fax: (41) 26-426-5500

Asia
Room 1219
Chinachem Golden Plaza
77 Mody Road Tsimshatsui
East Kowloon
Hong Kong
Tel: (852) 2721-9778
Fax: (852) 2722-1369

Japan
9F, Tonetsu Shinkawa Bldg.
1-24-8 Shinkawa
Chuo-ku, Tokyo 104-0033
Japan
Tel: (81) 3-3523-3551
Fax: (81) 3-3523-7581

Atmel Operations

Memory
2325 Orchard Parkway
San Jose, CA 95131, USA
Tel: 1(408) 441-0311
Fax: 1(408) 436-4314

Microcontrollers
2325 Orchard Parkway
San Jose, CA 95131, USA
Tel: 1(408) 441-0311
Fax: 1(408) 436-4314

La Chantrerie
BP 70602
44306 Nantes Cedex 3, France
Tel: (33) 2-40-18-18-18
Fax: (33) 2-40-18-19-60

ASIC/ASSP/Smart Cards
Zone Industrielle
13106 Rousset Cedex, France
Tel: (33) 4-42-53-60-00
Fax: (33) 4-42-53-60-01

1150 East Cheyenne Mtn. Blvd.
Colorado Springs, CO 80906, USA
Tel: 1(719) 576-3300
Fax: 1(719) 540-1759

Scottish Enterprise Technology Park
Maxwell Building
East Kilbride G75 0QR, Scotland
Tel: (44) 1355-803-000
Fax: (44) 1355-242-743

RF/Automotive
Theresienstrasse 2
Postfach 3535
74025 Heilbronn, Germany
Tel: (49) 71-31-67-0
Fax: (49) 71-31-67-2340

1150 East Cheyenne Mtn. Blvd.
Colorado Springs, CO 80906, USA
Tel: 1(719) 576-3300
Fax: 1(719) 540-1759

Biometrics/Imaging/Hi-Rel MPU/
High Speed Converters/RF Datacom
Avenue de Rochepleine
BP 123
38521 Saint-Egreve Cedex, France
Tel: (33) 4-76-58-30-00
Fax: (33) 4-76-58-34-80

Literature Requests
www.atmel.com/literature

Disclaimer: The information in this document is provided in connection with Atmel products. No license, express or implied, by estoppel or otherwise, to any intellectual property right is granted by this document or in connection with the sale of Atmel products. **EXCEPT AS SET FORTH IN ATMEL'S TERMS AND CONDITIONS OF SALE LOCATED ON ATMEL'S WEB SITE, ATMEL ASSUMES NO LIABILITY WHATSOEVER AND DISCLAIMS ANY EXPRESS, IMPLIED OR STATUTORY WARRANTY RELATING TO ITS PRODUCTS INCLUDING, BUT NOT LIMITED TO, THE IMPLIED WARRANTY OF MERCHANTABILITY, FITNESS FOR A PARTICULAR PURPOSE, OR NON-INFRINGEMENT. IN NO EVENT SHALL ATMEL BE LIABLE FOR ANY DIRECT, INDIRECT, CONSEQUENTIAL, PUNITIVE, SPECIAL OR INCIDENTAL DAMAGES (INCLUDING, WITHOUT LIMITATION, DAMAGES FOR LOSS OF PROFITS, BUSINESS INTERRUPTION, OR LOSS OF INFORMATION) ARISING OUT OF THE USE OR INABILITY TO USE THIS DOCUMENT, EVEN IF ATMEL HAS BEEN ADVISED OF THE POSSIBILITY OF SUCH DAMAGES.** Atmel makes no representations or warranties with respect to the accuracy or completeness of the contents of this document and reserves the right to make changes to specifications and product descriptions at any time without notice. Atmel does not make any commitment to update the information contained herein. Atmel's products are not intended, authorized, or warranted for use as components in applications intended to support or sustain life.

© Atmel Corporation 2005. All rights reserved. Atmel®, logo and combinations thereof, and others, are registered trademarks, and Everywhere You Are℠ and others are the trademarks of Atmel Corporation or its subsidiaries. Other terms and product names may be trademarks of others.

Printed on recycled paper.

3372F–FLASH–4/05 /xM