NLSV4T2244

Product Preview

Dual 2-Bit Dual-Supply Non-Inverting Level Translator

The NLSV4T2244 is a dual 2-bit configurable dual-supply bus buffer level translator. The ports A and B are designed to track two different power supply rails V_{CCA} and V_{CCB}, respectively. Both supply rails are configurable from 1.2 V to 4.1 V allowing universal low-voltage translation from the input port to the output port.

Features

- Wide V_{CCA} and V_{CCB} Operating Range: 1.2 V to 4.5 V
- High-Speed w/ Balanced Propagation Delay
- Inputs and Outputs have OVT Protection to 4.5 V
- Non-preferential V_{CCA} and V_{CCB} Sequencing
- Outputs at 3-State until Active V_{CC} is reached
- Power-Off Protection
- Ultra-Small packaging: 1.7mm x 2.0 mm UQFN-12

Typical Applications

- Mobile Phones, PDAs, Other Portable Devices

Important Information

- ESD Protection for All Pins:
  HBM (Human Body Model) > 8000 V

ON Semiconductor®

http://onsemi.com

UQFN12, 1.7 mm x 2.0 mm

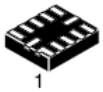

1

UQFN-12
MU SUFFIX
CASE 523AE

ORDERING INFORMATION

See detailed ordering and shipping information in the package dimension section.

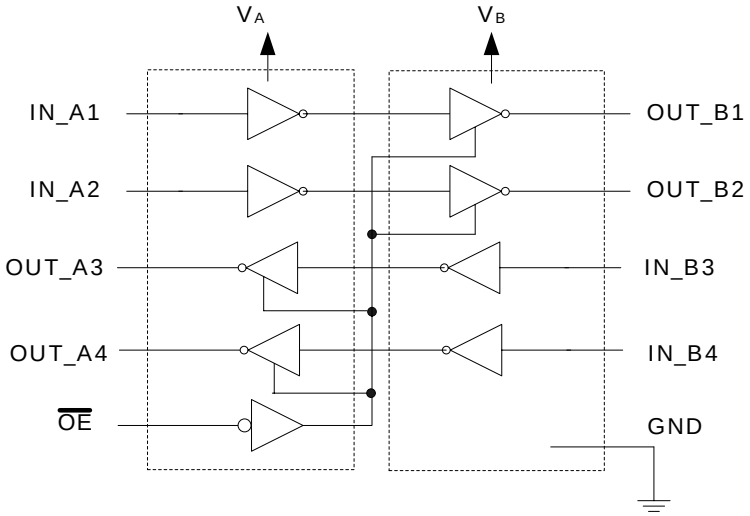

Logic Diagram

UQFN12
1.7 mm x 2.0 mm
(Top View)

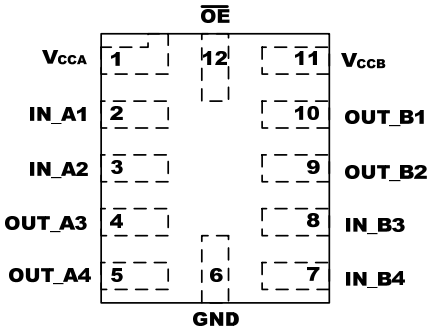

Pin Assignments

Dec. 7, 2007, Rev 0.1

Pin Names	
Pins	**Description**
V_{CCA}	'A' DC Power Supply
V_{CCB}	'B' DC Power Supply
GND	Ground
IN_A_1, IN_A2	Input (Referenced to V_A)
IN_B3, IN_B4	Input (Referenced to V_B)
OUT_B1, OUT_B2	Output (Referenced to V_B)
OUT_A3 OUT_A4	Output (Referenced to V_A)
$\overline{0E}$	Output Enable (Referenced to V_A)

Truth Table		
Inputs		**Outputs**
$\overline{0E}$	IN_A_1, IN_A_2, IN_A_3, IN_A_4	OUT_B_1, OUT_B_2, OUT_B_3, OUT_B_4
H	X	3-State
L	L	L
	H	H

MAXIMUM RATINGS

Symbol	Parameter		Value	Condition	Unit
V_{CCA}, V_{CCB}	DC Supply Voltage		-0.5 to +5.5		V
V_I	DC Input Voltage	IN_x_n	-0.5 to +5.5		V
V_C	Control Input	OE	-0.5 to +5.5		V
V_O	DC Output Voltage (Power Down)	OUT_x_n	-0.5 to +5.5	$V_{CCA} = V_{CCB} = 0$	V
	(Active Mode)	OUT_x_n	-0.5 to +5.5		V
	(Tri-State Mode)	OUT_x_n	-0.5 to +5.5		V
I_{IK}	DC Input Diode Current		-20	V_I < GND	mA
I_{OK}	DC Output Diode Current		-50	V_O < GND	mA
I_O	DC Output Source/Sink Current		±50		mA
I_{CCA} , I_{CCB}	DC Supply Current Per Supply Pin		±100		mA
I_{GND}	DC Ground Current per Ground Pin		±100		mA
T_{STG}	Storage Temperature		-65 to +150		ºC

Stresses exceeding "Maximum Ratings" may damage the device. "Maximum Ratings" are stress ratings only. Functional operation above "Recommended Operating Conditions" is not implied. Extended exposure to stresses above "Recommended Operating Conditions" may affect device reliability.

RECOMMENDED OPERATING CONDITIONS

Symbol	Parameter			Min	Max	Unit
V_{CCA}, V_{CCB}	Positive DC Supply Voltage			1.2	4.5	V
V_I	Bus Input Voltage			GND	4.5	V
V_C	Control Input		$\overline{0E}$	GND	4.5	V
V_{IO}	BUS Output Voltage	(Power Down)	OUT_x_n	GND	4.5	V
		(Active Mode)	OUT_x_n	GND	4.5	V
		(Tri-State Mode)	OUT_x_n	GND	4.5	V
T_A	Operating Temperature Range			-55	+125	ºC
$\Delta t / \Delta V$	Input Transition Rise or Rate V_I, from 30% to 70% of V_{CC}; V_{CC} =3.3 V ± 0.3V			0	10	nS

DC Electrical Characteristics

Symbol	Parameter	Test Conditions	V_{CCA} (V)	V_{CCB} (V)	-55ºC to +125ºC Min	-55ºC to +125ºC Max	Unit
V_{IH}	Input HIGH Voltage		3.6 – 4.5	1.2 – 4.5	TBD	-	V
			2.7 – 3.6		2.0	-	
			2.3 – 2.7		1.6	-	
			1.4 -2.3		0.65 * V_{CCA}	-	
			1.2 – 1.4		0.9 * V_{CCA}	-	
V_{IL}	Input LOW Voltage		3.6 – 4.5	1.2 – 4.5	-	TBD	V
			2.7 – 3.6		-	0.8	
			2.3 – 2.7		-	0.7	
			1.4 -2.3		-	0.35 * V_{CCA}	
			1.2 – 1.4			0.1 * V_{CCA}	
V_{OH}	Output HIGH Voltage	I_{OH} = -100 µA; $V_I = V_{IH}$	1.2 – 4.5	1.2 – 4.5	V_{CCB} – 0.2	-	V
		I_{OH} = -0.5 mA; $V_I = V_{IH}$	1.2	1.2	0.75 * V_{CCB}	-	
		I_{OH} = -2 mA; $V_I = V_{IH}$	1.4	1.4	1.05	-	
		I_{OH} = -6 mA; $V_I = V_{IH}$	1.65	1.65	1.25	-	
			2.3	2.3	2.0	-	
		I_{OH} = -12 mA; $V_I = V_{IH}$	2.3	2.3	1.8	-	
			2.7	2.7	2.2	-	
		I_{OH} = -18 mA; $V_I = V_{IH}$	2.3	2.3	1.7	-	
			3.0	3.0	2.4	-	
		I_{OH} = -24 mA; $V_I = V_{IH}$	3.0	3.0	2.2	-	
V_{OL}	Output LOW Voltage	I_{OL} = 100 µA; $V_I = V_{IL}$	1.2 – 4.5	1.2 – 4.5	-	0.2	V
		I_{OL} = 0.5 mA; $V_I = V_{IH}$	1.2	1.2	-	0.3 * V_{CCB}	
		I_{OL} = 2 mA; $V_I = V_{IH}$	1.4	1.4	-	0.35	
		I_{OL} = 6 mA; $V_I = V_{IL}$	1.65	1.65	-	0.3	
		I_{OL} = 12 mA; $V_I = V_{IL}$	2.3	2.3	-	0.4	
			2.7	2.7	-	0.4	
		I_{OL} = 18 mA; $V_I = V_{IL}$	2.3	2.3	-	0.6	
			3.0	3.0	-	0.4	
		I_{OL} = 24 mA; $V_I = V_{IL}$	3.0	3.0	-	0.55	
I_I	Input Leakage Current	$V_I = V_{CCA}$ or GND	1.2 – 4.5	1.2 – 4.5	-1.0	+1.0	µA
I_{OFF}	Power-Off Leakage Current	V_I or V_O = 0 to 4.5 V	1.2 – 4.5	0	-1.0	+1.0	µA
			0	1.2 – 4.5			
I_{OZ}	I/O Tri-State Output Leakage Current	TA = 25°C, $\overline{OE}$ = GND	1.2 – 4.5	1.2 – 4.5		2.0	µA
I_{CCA}	Quiescent Supply Current	$V_I = V_{CCA}$ or GND; I_O = 0	1.2 – 4.5	1.2 – 4.5		2.0	µA
I_{CCB}	Quiescent Supply Current	$V_I = V_{CCB}$ or GND; I_O = 0	1.2 – 4.5	1.2 – 4.5		2.0	µA
I_{CCA} + I_{CCB}	Quiescent Supply Current	$V_I = V_{CCA}$ or GND; I_O = 0	1.2 – 4.5	1.2 – 4.5		4.0	µA

DC Electrical Characteristics (Continued)

Symbol	Parameter	Test Conditions	V_{CCA} (V)	V_{CCB} (V)	-55ºC to +125ºC		Unit
					Min	Max	
ΔI_{CCA}	Increase in I_{CC} per Input Voltage, Other Inputs at V_{CCA} or GND	$V_I = V_{CCA} – 0.6$ V; $V_I = V_{CCA}$ or GND	4.5	4.5		10.0	µA
			3.6	3.6		5.0	
ΔI_{CCB}	Increase in I_{CC} per Input Voltage, Other Inputs at V_{CCB} or GND	$V_I = V_{CCA} – 0.6$ V; $V_I = V_{CCA}$ or GND	4.5	4.5		10.0	µA
			3.6	3.6		5.0	

Total Static Power Consumption ($I_{CCA} + I_{CCB}$)

	-55ºC to +125ºC										
	V_{CCB} (V)										
	4.5		3.6		2.8		1.8		1.2		
V_{CCA} (V)	Min	Max	Min	Max	Min	Max	Min	Max	Min	Max	Unit
4.5		2		2		2		2		< 1	µA
3.6		2		2		2		2		< 1	µA
2.8		< 2		< 1		< 1		< 0.5		< 0.5	µA
1.8		< 1		< 1		< 0.5		< 0.5		< 0.5	µA
1.2		< 1		< 1		< 0.5		< 0.5		< 0.5	µA

Notes: Connect ground before applying supply voltage V_{CCA} or V_{CCB}. This device is designed with the feature that the power-up sequence of V_{CCA} and V_{CCB} will not damage the IC.

AC Electrical Characteristics

			-55ºC to +125ºC										
			V_{CCB} (V)										
Symbol	Parameter	V_{CCA} (V)	4.5		3.6		2.8		1.8		1.2		Unit
			Min	Max	Min	Max	Min	Max	Min	Max	Min	Max	
t_{PLH}, t_{PHL}	Propagation Delay, A_n to B_n	4.5		1.6		1.8		2.0		2.1		2.3	nS
		3.6		1.7		1.9		2.1		2.3		2.5	
		2.8		1.9		2.1		2.3		2.5		2.7	
		1.8		2.1		2.4		2.5		2.7		2.9	
		1.2		2.4		2.7		2.8		3.0		3.2	
t_{PZH}, t_{PZL}	Output Enable, OE to OUT_x_n	4.5		2.6		3.8		4.0		4.1		4.3	nS
		3.6		3.7		3.9		4.1		4.3		4.5	
		2.8		3.9		4.1		4.3		4.5		4.7	
		1.8		4.1		4.4		4.5		4.7		4.9	
		1.2		4.4		4.7		4.8		5.0		5.2	
t_{PHZ}, t_{PLZ}	Output Disable, OE to OUT_x_n	4.5		2.6		3.8		4.0		4.1		4.3	nS
		3.6		3.7		3.9		4.1		4.3		4.5	
		2.8		3.9		4.1		4.3		4.5		4.7	
		1.8		4.1		4.4		4.5		4.7		4.9	
		1.2		4.4		4.7		4.8		5.0		5.2	
t_{OSHL}, t_{OSLH}	Output to Output Skew, Data to Output	4.5		0.15		0.15		0.15		0.15		0.15	nS
		3.6		0.15		0.15		0.15		0.15		0.15	
		2.8		0.15		0.15		0.15		0.15		0.15	
		1.8		0.15		0.15		0.15		0.15		0.15	
		1.2		0.15		0.15		0.15		0.15		0.15	

Notes: Propagation delays defined per Figure 1.

Capacitance

Symbol	Parameter	Test Conditions	Typ [(1)]	Unit
C_{IN}	Control Pin Input Capacitance	V_{CCA}=V_{CCB}=3.3 V, V_I= 0V or $V_{CCA/B}$	3.5	pF
$C_{I/O}$	I/O Pin Input Capacitance	V_{CCA}=V_{CCB}=3.3 V, V_I =0V or $V_{CCA/B}$	5.0	pF
C_{PD}	Power Dissipation Capacitance	V_{CCA}=V_{CCB}=3.3 V, V_I=0 V or V_{CCA}, f=10 MHz	10	pF

Notes:

1. Typical values are at T_A = +25 ºC
2. CPD is defined as the value of the IC's equivalent capacitance from which the operating current can be calculated from: $I_{CC(operating)} \cong C_{PD} \times V_{CC} \times f_{IN} \times N_{SW}$ where $I_{CC} = I_{CCA} + I_{CCB}$ and N_{SW} = total number of outputs switching

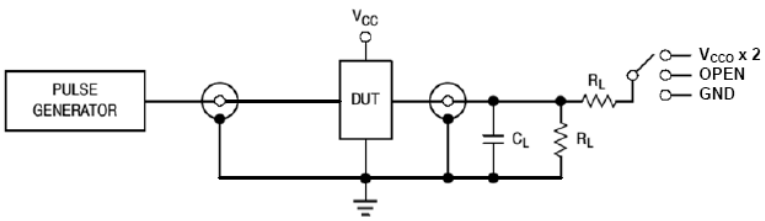

Test	Switch
t_{PLH}, t_{PHL}	OPEN
t_{PLZ}, t_{PZL}	V_{CCO} x 2
t_{PHZ}, t_{PZH}	GND
C_L = 15 pF or equivalent (includes probe and jig capacitance) R_L = 2 kΩ or equivalent Z_{OUT} of pulse generator = 50 Ω	

Figure 1. AC (Propagation Delay) Test Circuit

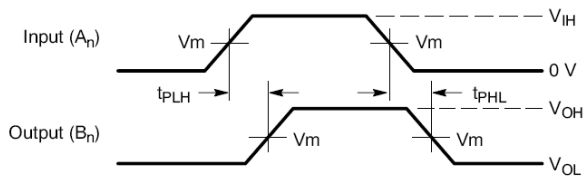

Waveform 1 - Propagation Delays
$t_R = t_F$ = 2.0 ns, 10% to 90%; f = 1 MHz; t_W = 500 ns

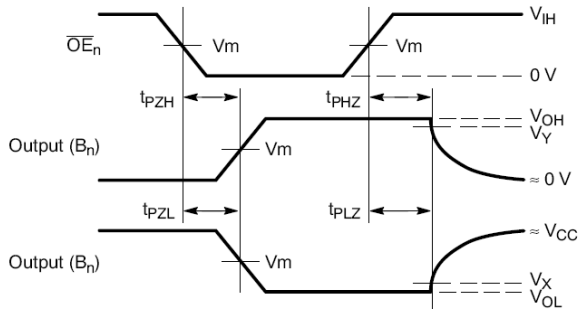

Waveform 2 - Output Enable and Disable Times
$t_R = t_F$ = 2.0 ns, 10% to 90%; f = 1 MHz; t_W = 500 ns

Symbol	V_{CC}
	1.2 – 4.5 V
V_{mA}	$V_{CCA}/2$
V_{mB}	$V_{CCB}/2$
V_X	V_{OL} x 0.1
V_Y	V_{OH} x 0.9

Figure 2: AC Waveforms

DEVICE ORDERING INFORMATION

Device Order Number	Package Type	Tape & Reel Size†
NLSV4T2244MUTAG	UQFN-12 (Pb-Free)	3000 Units/Reel

†For information on tape and reel specifications, including part orientation and tape size, please refer to our Tape and Reel Packaging Specifications Brochure, BRD8011/D.

PACKAGE DIMENSIONS

UQFN12 1.7x2.0, 0.4P
CASE 523AE−01
ISSUE A

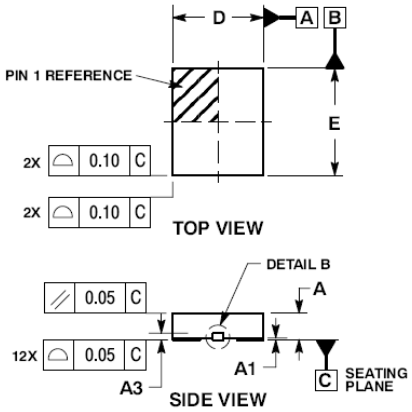

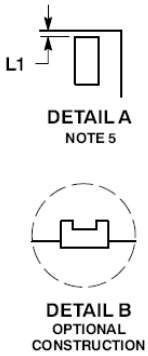

NOTES:
1. DIMENSIONING AND TOLERANCING PER ASME Y14.5M, 1994.
2. CONTROLLING DIMENSION: MILLIMETERS
3. DIMENSION b APPLIES TO PLATED TERMINAL AND IS MEASURED BETWEEN 0.15 AND 0.30 MM FROM TERMINAL TIP.
4. MOLD FLASH ALLOWED ON TERMINALS ALONG EDGE OF PACKAGE. FLASH 0.03 MAX ON BOTTOM SURFACE OF TERMINALS.
5. DETAIL A SHOWS OPTIONAL CONSTRUCTION FOR TERMINALS.

	MILLIMETERS	
DIM	MIN	MAX
A	0.45	0.55
A1	0.00	0.05
A3	0.127 REF	
b	0.15	0.25
D	1.70 BSC	
E	2.00 BSC	
e	0.40 BSC	
K	0.20	----
L	0.45	0.55
L1	0.00	0.03
L2	0.15 REF	

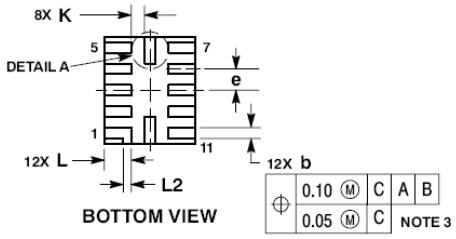

MOUNTING FOOTPRINT SOLDERMASK DEFINED

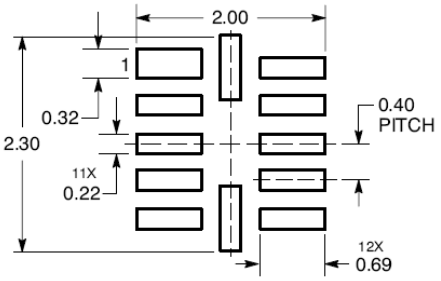

DIMENSIONS: MILLIMETERS

*For additional information on our Pb−Free strategy and soldering details, please download the ON Semiconductor Soldering and Mounting Techniques Reference Manual, SOLDERRM/D.

PUBLICATION ORDERING INFORMATION

LITERATURE FULFILLMENT:
Literature Distribution Center for ON Semiconductor
P.O. Box 61312, Phoenix, Arizona 85082−1312 USA
Phone: 480−829−7710 or 800−344−3860 Toll Free USA/Canada
Fax: 480−829−7709 or 800−344−3867 Toll Free USA/Canada
Email: orderlit@onsemi.com

N. American Technical Support: 800−282−9855 Toll Free USA/Canada

Japan: ON Semiconductor, Japan Customer Focus Center
2−9−1 Kamimeguro, Meguro−ku, Tokyo, Japan 153−0051
Phone: 81−3−5773−3850

ON Semiconductor Website: http://onsemi.com

Order Literature: http://www.onsemi.com/litorder

For additional information, please contact your local Sales Representative.

NLSV4T2244/D