# Low Skew CMOS Clock Driver

**MC88913**

**LOW SKEW CMOS CLOCK DRIVER**

The MC88913 is a high–speed, low power, hex divide–by–two D–type flip–flop with two inverting and four non–inverting outputs that have closely matched propagation delays. With a TTL compatible buffered clock input that is common to all flip–flops, the MC88913 is ideal for use in high–frequency systems as a clock driver, providing multiple outputs that are synchronous.

- Minimum Clock Input $f_{MAX}$ of 110MHz
- TTL Compatible Positive Edge–Triggered Clock
- Matched Outputs for Synchronous Applications
- Outputs Source/Sink 24mA
- Part–to–Part Skew of Less Than 4.0ns
- Guaranteed Rise and Fall Times for a Given Capacitive Load

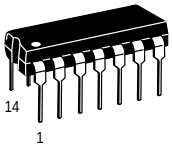


**N SUFFIX**
PLASTIC PACKAGE
CASE 646–06

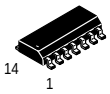


**D SUFFIX**
PLASTIC PACKAGE
CASE 751A–03

**Pinout: 14–Lead Plastic** (Top View)

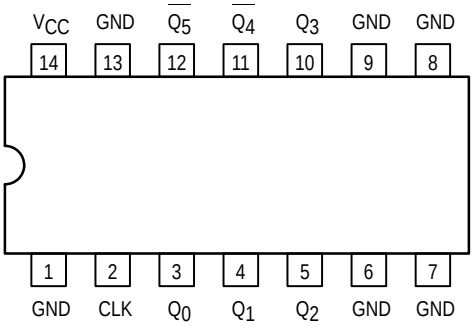


**MAXIMUM RATINGS***

| Symbol | Parameter | Value | Units |
|---|---|---|---|
| $V_{CC}$ | DC Supply Voltage (Referenced to GND) | –0.5 to +7.0 | V |
| $V_{in}$ | DC Input Voltage (Referenced to GND) | –0.5 to $V_{CC}$ + 0.5 | V |
| $V_{out}$ | DC Output Voltage (Referenced to GND) | –0.5 to $V_{CC}$ + 0.5 | V |
| $I_{in}$ | DC Input Current, per Pin | ± 20 | mA |
| $I_{out}$ | DC Output Sink/Source Current, per Pin | ± 50 | mA |
| $I_{CC}$ | DC $V_{CC}$ or GND Current per Output Pin | ± 50 | mA |
| $P_D$ | Power Dissipation in Still Air — Plastic Package**<br>SOIC Package** | 750<br>500 | mW |
| $T_{stg}$ | Storage Temperature | –65 to +150 | °C |
| $T_L$ | Lead Temperature, 1mm from Case for 10s (Plastic or SOIC Package) | 260 | °C |

* Maximum Ratings are those values beyond which damage to the device may occur. Functional operation should be restricted to the Recommended Operating Conditions.

** Derating: Plastic Package: –10mW/°C from 65°C to 125°C
SOIC Package: –7.0mW/°C from 65°C to 125°C

## LOGIC DIAGRAM

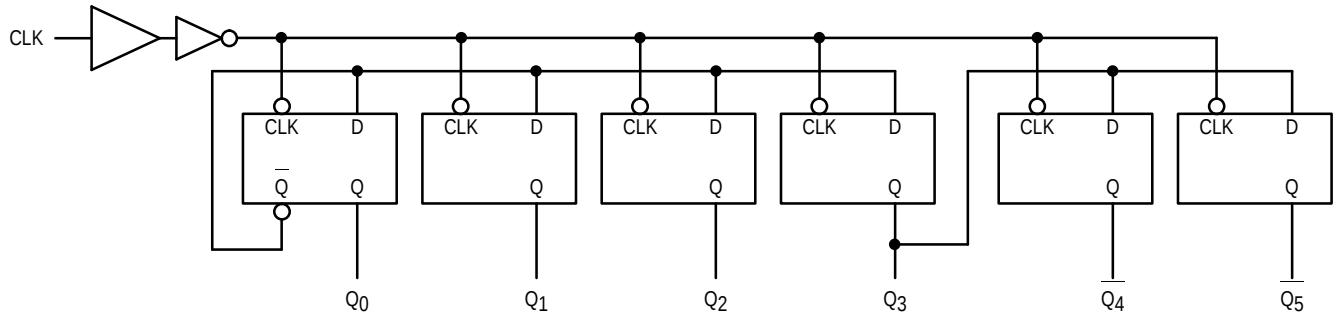


NOTE: This diagram is provided only for understanding of logic operation and should **not** be used to estimate propagation delays

## RECOMMENDED OPERATING CONDITIONS

| Symbol | Parameter | Min | Max | Unit |
|---|---|---|---|---|
| $V_{CC}$ | DC Supply Voltage (Referenced to GND) | 2.0 | 6.0 | V |
| $V_{in}$, $V_{out}$ | DC Input Voltage, Output Voltage (Referenced to GND) | 0 | $V_{CC}$ | V |
| $T_A$ | Operating Temperature | –40 | +85 | °C |
| $t_r$, $t_f$ | Input Rise and Fall Time $V_{in}$ from 0.8 to 2.0V<br>$V_{meas}$ from 0.8 to 2.0V | 0<br>0 | 10<br>8.0 | ns/V |

## DC CHARACTERISTICS (unless otherwise specified)

| Symbol | Parameter | | Unit | Condition |
|---|---|---|---|---|
| $I_{CC}$ | Maximum Quiescent Supply Current | 80 | µA | $V_{IN} = V_{CC}$ or GND<br>$V_{CC}$ = 5.5V,<br>$T_A$ = Worst Case |
| $I_{CC}$ | Maximum Quiescent Supply Current | 8.0 | µA | $V_{IN} = V_{CC}$ or GND<br>$V_{CC}$ = 5.5V,<br>$T_A$ = 25°C |
| $I_{CCT}$ | Maximum Additional $I_{CC}$/Input | 1.5 | mA | $V_{IN} = V_{CC}$ –2.1V<br>$V_{CC}$ = 5.5V,<br>$T_A$ = Worst Case |

## AC OPERATING REQUIREMENTS

| Symbol | Parameter | $V_{CC}$ (V) | $T_A$ = 25°C $C_L$ = 50 pF | | $T_A$ = –40 to +85°C $C_L$ = 50 pF | | Unit |
|---|---|---|---|---|---|---|---|
| | | | Min | Max | Min | Max | |
| $t_W$ | CLK Pulse Width (HIGH to LOW) | 5.0 | 3.0 | | 3.0 | | ns |

## CAPACITANCE

| Symbol | Parameter | Typ | Unit | Condition |
|---|---|---|---|---|
| $C_{IN}$ | Input Capacitance | 4.5 | pF | $V_{CC}$ = 5.0V |
| $C_{PD}$ | Power Dissipation Capacitance | 30 | pF | $V_{CC}$ = 5.0V |

## DC CHARACTERISTICS

| Symbol | Parameter | $V_{CC}$ | $T_A$ = +25°C Typ | $T_A$ = +25°C Guaranteed Max | $T_A$ = –40 to +85°C Guaranteed Max | Unit | Conditions |
|---|---|---|---|---|---|---|---|
| $V_{IH}$ | Minimum High Level Input Voltage | 4.5<br>5.5 | 1.5<br>1.5 | 2.0<br>2.0 | 2.0<br>2.0 | V | $V_{OUT}$ = 0.1V or $V_{CC}$ – 0.1V |
| $V_{IL}$ | Maximum Low Level Input Voltage | 4.5<br>5.5 | 1.5<br>1.5 | 0.8<br>0.8 | 0.8<br>0.8 | V | $V_{OUT}$ = 0.1V or $V_{CC}$ – 0.1V |
| $V_{OH}$ | Minimum High Level | 4.5<br>5.5 | 4.49<br>5.49 | 4.4<br>5.4 | 4.4<br>5.4 | V | $I_{OUT}$ = –50µA |
| | | 4.5<br>5.5 | | 3.86<br>4.86 | 3.76<br>4.76 | V | *$V_{IN}$ = $V_{IL}$ or $V_{IH}$<br>$I_{OH}$ = –24mA<br>–24mA |
| $V_{OL}$ | Maximum Low Level Output Voltage | 4.5<br>5.5 | 0.001<br>0.001 | 0.1<br>0.1 | 0.1<br>0.1 | V | $I_{OUT}$ = 50µA |
| | | 4.5<br>5.5 | | 0.36<br>0.36 | 0.44<br>0.44 | V | *$V_{IN}$ = $V_{IL}$ or $V_{IH}$<br>$I_{OH}$ = 24mA<br>24mA |
| $I_{IN}$ | Maximum Input | 5.5 | | ±0.1 | ±0.1 | µA | $V_I$ = $V_{CC}$, GND |
| $I_{CCT}$ | Maximum $I_{CC}$/Input | 5.5 | 0.6 | | 1.5 | mA | $V_I$ = $V_{CC}$ –2.1V |
| $I_{OLD}$ | Minimum Dynamic Output Current** | 5.5 | | | 75 | mA | $V_{OLD}$ = 1.65V |
| $I_{OHD}$ | | 5.5 | | | –75 | mA | $V_{OHD}$ = 3.85V |

* All outputs loaded; thresholds on inputs associated with output under test.
** Maximum test duration 20ms, one output at a time.

## AC CHARACTERISTICS ($V_{CC}$ = 5.0V ±10%)

| Symbol | Parameter | $V_{CC}$ (V) | $T_A$ = 25°C, $C_L$ = 50 pF Min | $T_A$ = 25°C, $C_L$ = 50 pF Max | $T_A$ = –40 to +85°C, $C_L$ = 50 pF Min | $T_A$ = –40 to +85°C, $C_L$ = 50 pF Max | Unit |
|---|---|---|---|---|---|---|---|
| $f_{MAX}$ | Maximum Clock Frequency (50% Duty Cycle) | 5.0 | 110 | | 110 | | MHz |
| $t_{PLH}$, $t_{PHL}$ | Propagation Delay CLK to $Q_n$, $Q_n$ | 5.0 | 4.0 | 10.5 | 4.0 | 11.5 | ns |
| $t_{PV}$ | Propagation Delay Variation CLK to $Q_0$, $Q_1$, $Q_2$ (see Note 1) | 5.0 | | 4.0 | | 5.0 | ns |
| | Propagation Delay Variation CLK to All Outputs (see Note 1) | 5.0 | | 4.5 | | 5.5 | ns |
| $t_{PS}$ | Propagation Delay Skew ($Q_0$, $Q_1$, $Q_2$) \|$t_{PHL}$ Actual – $t_{PLH}$ Actual\| | 5.0 | | 1.0 | | 1.0 | ns |
| | Propagation Delay Skew (All Outputs) \|$t_{PHL}$ Actual – $t_{PLH}$ Actual\| | 5.0 | | 1.5 | | 1.5 | ns |
| $t_{OS}$ | Output–to–Output Skew ($Q_0$, $Q_1$, $Q_2$) \|$t_p$ $Q_n$ – $t_p$ $Q_m$\| (see Note 2) | 5.0 | | 1.0 | | 1.0 | ns |
| | Output–to–Output Skew (All Outputs) \|$t_p$ $Q_n$ – $t_p$ $Q_m$\| (see Note 2) | 5.0 | | 1.5 | | 1.5 | ns |
| $t_{rise}$ $t_{fall}$ | Rise/Fall Time for $Q_0$, $Q_1$, $Q_2$ (0.2 x $V_{CC}$ to 0.8 x $V_{CC}$) | 5.0 | | 3.0 | | 4.0 | ns |
| | Rise/Fall Time for All Outputs (0.2 x $V_{CC}$ to 0.8 x $V_{CC}$) | 5.0 | | 3.5 | | 4.5 | ns |

1. For a given set of conditions (i.e., capacitive load, temperature and $V_{CC}$) the variation from device to device is guaranteed to be less than or equal to the maximum.
2. Where $t_p$ $Q_n$ and $t_p$ $Q_m$ are the actual propagation delays (any combination of HIGH or LOW) for any two separate outputs from a given high transition of CLK.

## OUTLINE DIMENSIONS

**N SUFFIX**
PLASTIC PACKAGE
CASE 646–06
ISSUE L

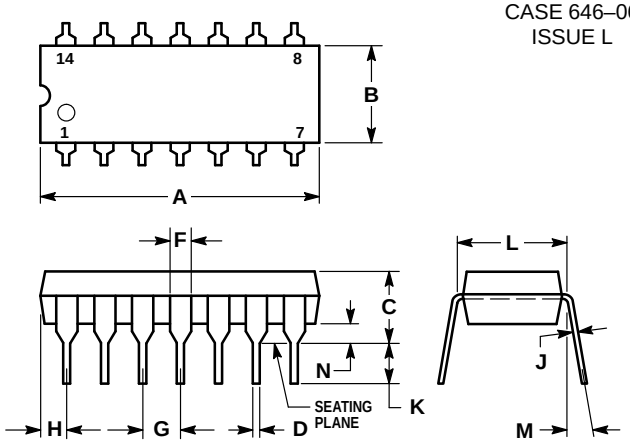


NOTES:
1. LEADS WITHIN 0.13 (0.005) RADIUS OF TRUE POSITION AT SEATING PLANE AT MAXIMUM MATERIAL CONDITION.
2. DIMENSION L TO CENTER OF LEADS WHEN FORMED PARALLEL.
3. DIMENSION B DOES NOT INCLUDE MOLD FLASH.
4. ROUNDED CORNERS OPTIONAL.

| DIM | INCHES MIN | INCHES MAX | MILLIMETERS MIN | MILLIMETERS MAX |
|---|---|---|---|---|
| A | 0.715 | 0.770 | 18.16 | 19.56 |
| B | 0.240 | 0.260 | 6.10 | 6.60 |
| C | 0.145 | 0.185 | 3.69 | 4.69 |
| D | 0.015 | 0.021 | 0.38 | 0.53 |
| F | 0.040 | 0.070 | 1.02 | 1.78 |
| G | 0.100 BSC | | 2.54 BSC | |
| H | 0.052 | 0.095 | 1.32 | 2.41 |
| J | 0.008 | 0.015 | 0.20 | 0.38 |
| K | 0.115 | 0.135 | 2.92 | 3.43 |
| L | 0.300 BSC | | 7.62 BSC | |
| M | 0° | 10° | 0° | 10° |
| N | 0.015 | 0.039 | 0.39 | 1.01 |

**D SUFFIX**
PLASTIC SOIC PACKAGE
CASE 751A–03
ISSUE F

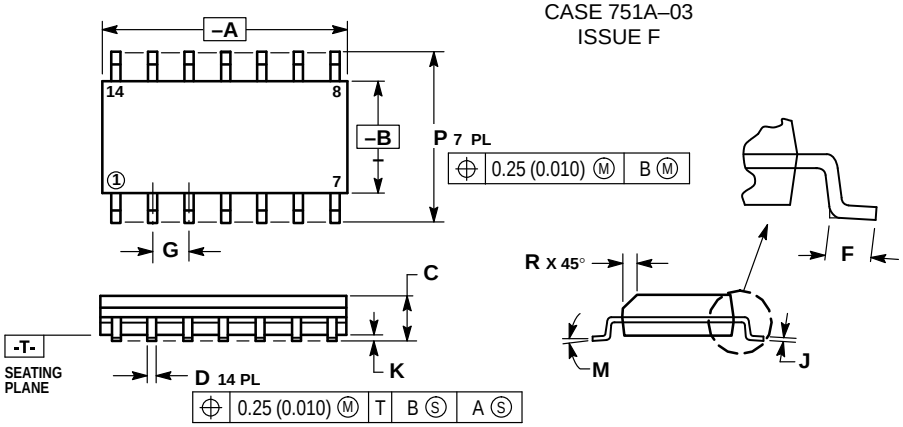


NOTES:
1. DIMENSIONING AND TOLERANCING PER ANSI Y14.5M, 1982.
2. CONTROLLING DIMENSION: MILLIMETER.
3. DIMENSIONS A AND B DO NOT INCLUDE MOLD PROTRUSION.
4. MAXIMUM MOLD PROTRUSION 0.15 (0.006) PER SIDE.
5. DIMENSION D DOES NOT INCLUDE DAMBAR PROTRUSION. ALLOWABLE DAMBAR PROTRUSION SHALL BE 0.127 (0.005) TOTAL IN EXCESS OF THE D DIMENSION AT MAXIMUM MATERIAL CONDITION.

| DIM | MILLIMETERS MIN | MILLIMETERS MAX | INCHES MIN | INCHES MAX |
|---|---|---|---|---|
| A | 8.55 | 8.75 | 0.337 | 0.344 |
| B | 3.80 | 4.00 | 0.150 | 0.157 |
| C | 1.35 | 1.75 | 0.054 | 0.068 |
| D | 0.35 | 0.49 | 0.014 | 0.019 |
| F | 0.40 | 1.25 | 0.016 | 0.049 |
| G | 1.27 BSC | | 0.050 BSC | |
| J | 0.19 | 0.25 | 0.008 | 0.009 |
| K | 0.10 | 0.25 | 0.004 | 0.009 |
| M | 0° | 7° | 0° | 7° |
| P | 5.80 | 6.20 | 0.228 | 0.244 |
| R | 0.25 | 0.50 | 0.010 | 0.019 |



**How to reach us:**
**USA/EUROPE**: Motorola Literature Distribution;
P.O. Box 20912; Phoenix, Arizona 85036. 1–800–441–2447

**MFAX**: RMFAX0@email.sps.mot.com –TOUCHTONE (602) 244–6609
**INTERNET**: http://Design–NET.com

**JAPAN**: Nippon Motorola Ltd.; Tatsumi–SPD–JLDC, Toshikatsu Otsuki,
6F Seibu–Butsuryu–Center, 3–14–2 Tatsumi Koto–Ku, Tokyo 135, Japan. 03–3521–8315

**HONG KONG**: Motorola Semiconductors H.K. Ltd.; 8B Tai Ping Industrial Park,
51 Ting Kok Road, Tai Po, N.T., Hong Kong. 852–26629298