DATA SHEET

BITSTREAM CONVERSION

UDA1324TS
Ultra low-voltage stereo filter DAC

Product specification
Supersedes data of 2000 Jan 20
File under Integrated Circuits, IC01

2001 Mar 27

Philips
Semiconductors

PHILIPS

Ultra low-voltage stereo filter DAC UDA1324TS

FEATURES

General

- Low power consumption
- Ultra low power supply voltage from 1.9 to 2.7 V
- Selectable control via L3 microcontroller interface or via static pin control
- System clock frequencies of $256f_s$, $384f_s$ and $512f_s$ selectable via L3 interface or $256f_s$ and $384f_s$ via static pin control
- Supports sampling frequencies (f_s) from 8 to 48 kHz
- Integrated digital filter plus non inverting Digital-to-Analog Converter (DAC)
- No analog post filtering required for DAC
- Slave mode only applications
- Easy application
- Small package size (SSOP16).

Multiple format input interface

- L3 mode: I^2S-bus, MSB-justified or LSB-justified 16, 18 and 20 bits format compatible
- Static pin mode: I^2S-bus or LSB-justified 16, 18 and 20 bits format compatible
- $1f_s$ input format data rate.

DAC digital sound processing

- Digital logarithmic volume control in L3 mode
- Digital de-emphasis selection for 32, 44.1 and 48 kHz sampling frequencies in L3 mode or 44.1 kHz sampling frequency in static pin mode
- Soft mute control in static pin mode or in L3 mode.

Advanced audio configuration

- Stereo line output (volume control in L3 mode)
- High linearity, wide dynamic range and low distortion.

BITSTREAM CONVERSION

APPLICATIONS

- Portable digital audio equipment.

GENERAL DESCRIPTION

The UDA1324TS is a single-chip stereo DAC employing bitstream conversion techniques. The ultra low-voltage requirements make the device eminently suitable for use in portable digital audio equipment which incorporates playback functions.

The UDA1324TS supports the I^2S-bus data format with word lengths of up to 20 bits, the MSB-justified data format with word lengths of up to 20 bits and the LSB-justified serial data format with word lengths of 16, 18 and 20 bits.

The UDA1324TS can be used in two modes: L3 mode or static pin mode.

In the L3 mode, all digital sound processing features must be controlled via the L3 interface, including the selection of the system clock setting.

In the two static modes, the UDA1324TS can be operated in the $256f_s$ and $384f_s$ system clock mode. Muting, de-emphasis for 44.1 kHz and four digital input formats (I^2S-bus or LSB-justified 16, 18 and 20 bits) can be selected via static pins. The L3 interface cannot be used in this application mode, so volume control is not available in this mode.

ORDERING INFORMATION

TYPE NUMBER	PACKAGE		
	NAME	DESCRIPTION	VERSION
UDA1324TS	SSOP16	plastic shrink small outline package; 16 leads; body width 4.4 mm	SOT369-1

QUICK REFERENCE DATA

SYMBOL	PARAMETER	CONDITIONS	MIN.	TYP.	MAX.	UNIT
Supplies						
V_{DDA}	analog supply voltage		1.9	2.0	2.7	V
V_{DDD}	digital supply voltage		1.9	2.0	2.7	V
I_{DDA}	analog supply current	V_{DDA} = 2.0 V	–	3.0	–	mA
I_{DDD}	digital supply current	V_{DDD} = 2.0 V	–	1.5	–	mA
DAC; note 1						
$V_{o(rms)}$	output voltage (RMS value)	note 2	–	500	–	mV
(THD + N)/S	total harmonic distortion-plus-noise to signal ratio	at 0 dB	–	–83	–78	dB
		at –60 dB; A-weighted	–	–36	–	dB
S/N	signal-to-noise ratio	code = 0; A-weighted	–	97	–	dB
α_{cs}	channel separation		–	100	–	dB
T_{amb}	ambient temperature		–40	–	+70	°C

Notes

1. The analog performance figures are measured at 2.0 V supply voltage.
2. The DAC output voltage scales linearly with the power supply voltage.

BLOCK DIAGRAM

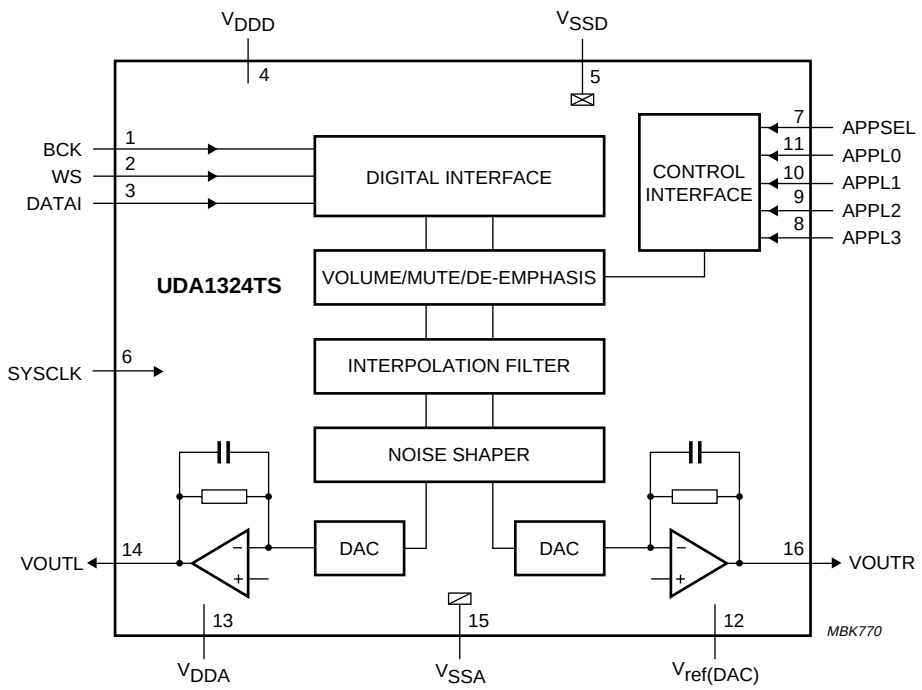

Fig.1 Block diagram.

PINNING

SYMBOL	PIN	DESCRIPTION
BCK	1	bit clock input
WS	2	word select input
DATAI	3	data input
V_{DDD}	4	digital supply voltage
V_{SSD}	5	digital ground
SYSCLK	6	system clock input: $256f_s$, $384f_s$ and $512f_s$
APPSEL	7	application mode select input
APPL3	8	application input pin 3
APPL2	9	application input pin 2
APPL1	10	application input pin 1
APPL0	11	application input pin 0
$V_{ref(DAC)}$	12	DAC reference voltage
V_{DDA}	13	analog supply voltage for DAC
VOUTL	14	left channel output
V_{SSA}	15	analog ground for DAC
VOUTR	16	right channel output

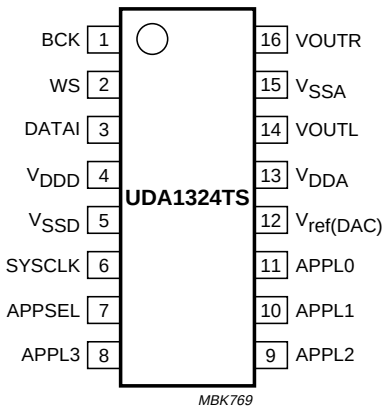

Fig.2 Pin configuration.

FUNCTIONAL DESCRIPTION

System clock

The UDA1324TS operates in the slave mode only. Therefore, in all applications the system devices must provide the system clock. The system frequency (f_{sys}) is selectable and depends on the application mode.
The options are: $256f_s$, $384f_s$ and $512f_s$ for the L3 mode and $256f_s$ or $384f_s$ for the static pin mode. The system clock must be locked in frequency to the digital interface input signals.

The UDA1324TS supports sampling frequencies (f_s) from 8 to 48 kHz.

Application modes

The application mode can be set with the three-level pin APPSEL (see Table 1):

- L3 mode
- Static pin mode with $f_{sys} = 384f_s$
- Static pin mode with $f_{sys} = 256f_s$.

Table 1 Selecting application mode and system clock frequency via pin APPSEL

VOLTAGE ON PIN APPSEL	MODE	f_{sys}
V_{SSD}	L3 mode	$256f_s$, $384f_s$ or $512f_s$
$0.5V_{DDD}$	static pin mode	$384f_s$
V_{DDD}		$256f_s$

The function of an application input pin (active HIGH) depends on the application mode (see Table 2).

Table 2 Functions of application input pins

PIN	FUNCTION	
	L3 MODE	STATIC PIN MODE
APPL0	TEST	MUTE
APPL1	L3CLOCK	DEEM
APPL2	L3MODE	SF0
APPL3	L3DATA	SF1

For example, in the static pin mode the output signal can be soft muted by setting pin APPL0 to HIGH.
De-emphasis can be switched on for 44.1 kHz by setting pin APPL1 to HIGH; setting pin APPL1 to LOW will disable de-emphasis.

In the L3 mode, pin APPL0 must be set to LOW. It should be noted that when the L3 mode is used, an initialization must be performed when the IC is powered-up.

Digital interface

DATA FORMATS

The digital interface of the UDA1324TS supports multiple format inputs (see Fig.3).

Left and right data-channel words are time multiplexed.

The WS signal must have a 50% duty factor for all LSB-justified formats.

The BCK clock can be up to $64f_s$, or in other words the BCK frequency is 64 times the Word Select (WS) frequency or less: $f_{BCK} \leq 64 \times f_{WS}$.

Important: the WS edge MUST fall on the negative edge of the BCK at all times for proper operation of the digital interface.

The UDA1324TS also accepts double speed data for double speed data monitoring purposes.

L3 MODE

- I^2S-bus format with data word length of up to 20 bits
- MSB-justified format with data word length up to 20 bits
- LSB-justified format with data word length of 16, 18 or 20 bits.

STATIC PIN MODE

- I^2S-bus format with data word length of up to 20 bits
- LSB-justified format with data word length of 16, 18 or 20 bits.

These four formats are selectable via the static pin codes SF0 and SF1 (see Table 3).

Table 3 Input format selection using SF0 and SF1

FORMAT	SF0	SF1
I^2S-bus	0	0
LSB-justified 16 bits	0	1
LSB-justified 18 bits	1	0
LSB-justified 20 bits	1	1

Interpolation filter

The digital filter interpolates from $1f_s$ to $128f_s$ by cascading a recursive filter and a FIR filter (see Table 4).

Table 4 Interpolation filter characteristics

ITEM	CONDITION	VALUE (dB)
Pass-band ripple	0 to $0.45f_s$	±0.1
Stop band	$>0.55f_s$	–50
Dynamic range	0 to $0.45f_s$	108

Noise shaper

The 3rd-order noise shaper operates at $128f_s$. It shifts in-band quantization noise to frequencies well above the audio band. This noise shaping technique enables high signal-to-noise ratios to be achieved. The noise shaper output is converted into an analog signal using a Filter Stream Digital-to-Analog Converter (FSDAC).

Filter stream DAC

The FSDAC is a semi-digital reconstruction filter that converts the 1-bit data stream of the noise shaper to an analog output voltage. The filter coefficients are implemented as current sources and are summed at virtual ground of the output operational amplifier. In this way very high signal-to-noise performance and low clock jitter sensitivity is achieved. A post filter is not needed due to the inherent filter function of the DAC. On-board amplifiers convert the FSDAC output current to an output voltage capable of driving a line output.

The output voltage of the FSDAC scales linearly with the power supply voltage.

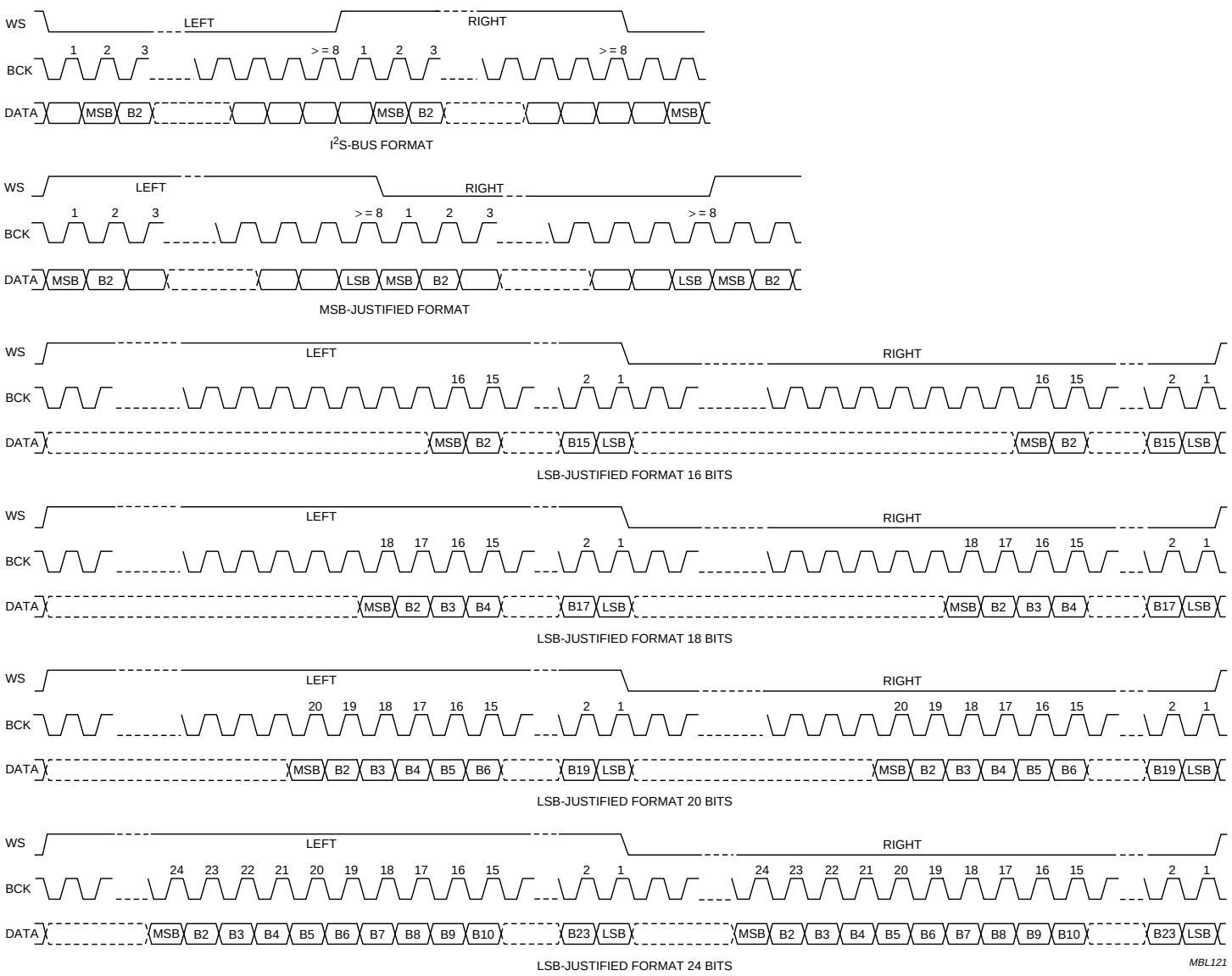

Fig.3 Digital interface input data formats.

L3 INTERFACE

The following system and digital sound processing features can be controlled in the L3 mode of the UDA1324TS:

- System clock frequency
- Data input format
- De-emphasis for 32, 44.1 and 48 kHz
- Volume
- Soft mute.

The exchange of data and control information between the microcontroller and the UDA1324TS is accomplished through a serial interface comprising the following signals:

- L3DATA
- L3MODE
- L3CLOCK.

Information transfer through the microcontroller bus is organized in accordance with the L3 interface format, in which two different modes of operation can be distinguished: address mode and data transfer mode.

Address mode

The address mode (see Fig.4) is required to select a device communicating via the L3 interface and to define the destination registers for the data transfer mode.

Data bits 7 to 2 represent a 6-bit device address where bit 7 is the MSB. The address of the UDA1324TS is 000101 (bit 7 to bit 2). If the UDA1324TS receives a different address, it will deselect its microcontroller interface logic.

Data transfer mode

The selected address remains active during subsequent data transfers until the UDA1324TS receives a new address command.

The fundamental timing of data transfers (see Fig.5) is essentially the same as the address mode. The maximum input clock frequency and data rate is $64f_s$.

Data transfer can only be in one direction, consisting of input to the UDA1324TS to program sound processing and other functional features. All data transfers are by 8-bit bytes. Data will be stored in the UDA1324TS after reception of a complete byte.

A multi-byte transfer is illustrated in Fig.6.

Registers

The sound processing and other feature values are stored in independent registers. The first selection of the registers is achieved by the choice of data type that is transferred. This is performed in the address mode using bit 1 and bit 0 (see Table 5).

Table 5 Selection of data transfer

BIT 1	BIT 0	TRANSFER
0	0	data (volume, de-emphasis, mute)
0	1	not used
1	0	status (system clock frequency, data input format)
1	1	not used

The second selection is performed by the 2 MSBs of the data byte (bit 7 and bit 6). The other bits in the data byte (bit 5 to bit 0) represent the value that is placed in the selected registers.

The ‘status’ settings are given in Table 6 and the ‘data’ settings are given in Table 7.

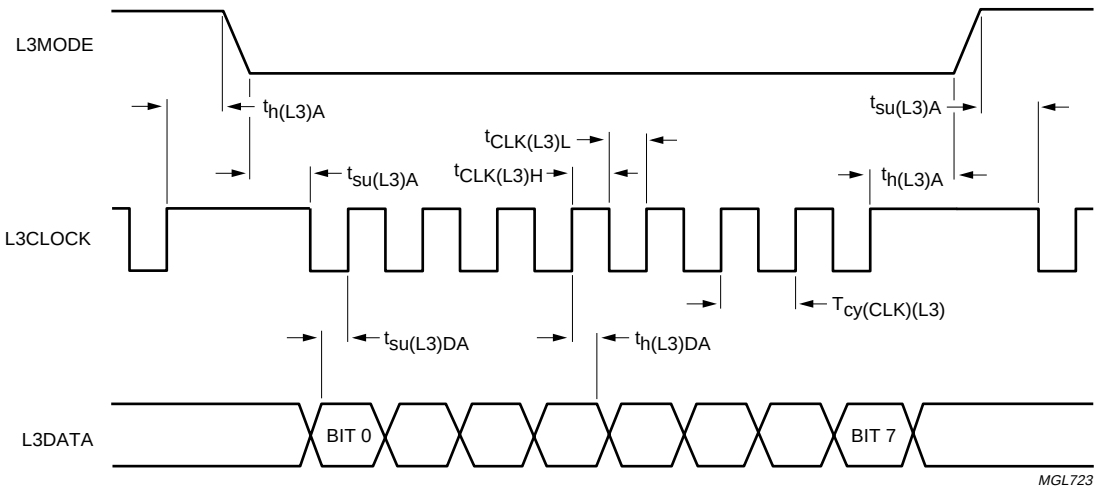

Fig.4 Timing address mode.

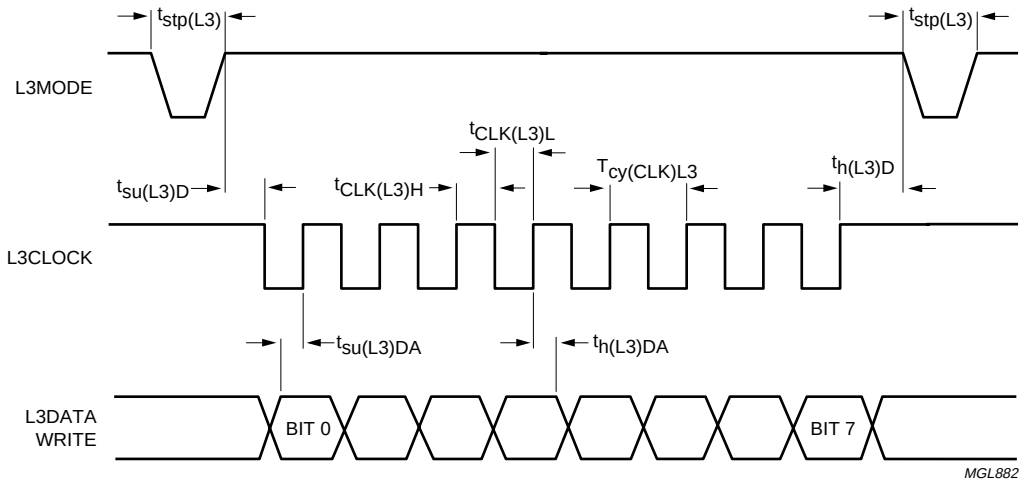

Fig.5 Timing data transfer mode.

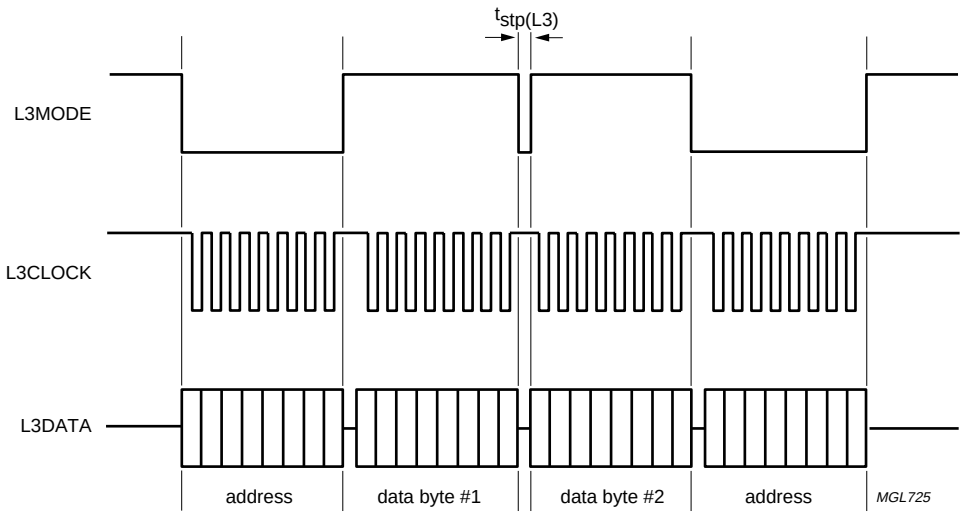

Fig.6 Multibyte data transfer.

Programming the features

When the data transfer of type ‘status’ is selected, the features for the system clock frequency and the data input format can be controlled.

Table 6 Data transfer of type ‘status’

BIT 7	BIT 6	BIT 5	BIT 4	BIT 3	BIT 2	BIT 1	BIT 0	REGISTER SELECTED
0	0	SC1	SC0	IF2	IF1	IF0	0	SC = system clock frequency (2 bits); see Table 8
								IF = data input format (3 bits); see Table 9
1	0	0	0	0	0	0	0	not used

When the data transfer of type ‘data’ is selected, the features for volume, de-emphasis and mute can be controlled.

Table 7 Data transfer of type ‘data’

BIT 7	BIT 6	BIT 5	BIT 4	BIT 3	BIT 2	BIT 1	BIT 0	REGISTER SELECTED
0	0	VC5	VC4	VC3	VC2	VC1	VC0	VC = volume control (6 bits); see Table 11
0	1	0	0	0	0	0	0	not used
1	0	0	DE1	DE0	MT	0	0	DE = de-emphasis (2 bits); see Table 10
								MT = mute (1 bit); see Table 12
1	1	0	0	0	0	0	1	default setting

SYSTEM CLOCK FREQUENCY

The system clock frequency is a 2-bit value to select the external clock frequency.

Table 8 System clock settings

SC1	SC0	FUNCTION
0	0	$512f_s$
0	1	$384f_s$
1	0	$256f_s$
1	1	not used

DATA FORMAT

The data format is a 3-bit value to select the used data format.

Table 9 Data input format settings

IF2	IF1	IF0	FORMAT
0	0	0	I^2S-bus
0	0	1	LSB-justified 16 bits
0	1	0	LSB-justified 18 bits
0	1	1	LSB-justified 20 bits
1	0	0	MSB-justified
1	0	1	not used
1	1	0	not used
1	1	1	not used

DE-EMPHASIS

De-emphasis is a 2-bit value to enable the digital de-emphasis filter.

Table 10 De-emphasis settings

DE1	DE0	FUNCTION
0	0	no de-emphasis
0	1	de-emphasis, 32 kHz
1	0	de-emphasis, 44.1 kHz
1	1	de-emphasis, 48 kHz

VOLUME CONTROL

The volume control is a 6-bit value to program the volume attenuation from 0 to –60 dB and –∞ dB in steps of 1 dB.

Table 11 Volume settings

VC5	VC4	VC3	VC2	VC1	VC0	VOLUME (dB)
0	0	0	0	0	0	0
0	0	0	0	0	1	0
0	0	0	0	1	0	–1
0	0	0	0	1	1	–2
:	:	:	:	:	:	:
1	1	0	0	1	1	–51
1	1	0	1	0	0	
1	1	0	1	0	1	–52
1	1	0	1	1	0	
1	1	0	1	1	1	–54
1	1	1	0	0	0	
1	1	1	0	0	1	–57
1	1	1	0	1	0	
1	1	1	0	1	1	
1	1	1	1	0	0	–60
1	1	1	1	0	1	
1	1	1	1	1	0	–∞
1	1	1	1	1	1	

MUTE

Mute is a 1-bit value to enable the digital mute.

Table 12 Mute setting

MT	FUNCTION
0	no muting
1	muting

LIMITING VALUES

In accordance with the Absolute Maximum Rating System (IEC 60134).

SYMBOL	PARAMETER	CONDITIONS	MIN.	MAX.	UNIT
V_{DDD}	digital supply voltage	note 1	–	5.0	V
V_{DDA}	analog supply voltage	note 1	–	5.0	V
$T_{xtal(max)}$	maximum crystal temperature		–	150	°C
T_{stg}	storage temperature		–65	+125	°C
T_{amb}	ambient temperature		–40	+85	°C
V_{es}	electrostatic handling voltage	note 2	–3000	+3000	V
		note 3	–300	+300	V
$I_{sc(DAC)}$	short-circuit current of DAC	note 4			
		output short-circuited to $V_{SSA(DAC)}$	–	450	mA
		output short-circuited to $V_{DDA(DAC)}$	–	300	mA

Notes

1. All supply connections must be made to the same power supply.
2. Equivalent to discharging a 100 pF capacitor via a 1.5 kΩ series resistor, except pin 14 which can withstand ESD pulses of –2500 to +2500 V.
3. Equivalent to discharging a 200 pF capacitor via a 2.5 μH series inductor.
4. Short-circuit test at T_{amb} = 0 °C and V_{DDA} = 3 V. DAC operation after short-circuiting cannot be guaranteed.

HANDLING

Inputs and outputs are protected against electrostatic discharge in normal handling. However, to be totally safe, it is desirable to take normal precautions appropriate to handling MOS devices.

THERMAL CHARACTERISTICS

SYMBOL	PARAMETER	CONDITIONS	VALUE	UNIT
$R_{th(j-a)}$	thermal resistance from junction to ambient	in free air	190	K/W

QUALITY SPECIFICATION

In accordance with *“SNW-FQ-611-E”*.

DC CHARACTERISTICS

V_{DDD} = V_{DDA} = 2.0 V; T_{amb} = 25 °C; R_L = 5 kΩ; all voltages referenced to ground (pins V_{SSA} and V_{SSD}); unless otherwise specified.

SYMBOL	PARAMETER	CONDITIONS	MIN.	TYP.	MAX.	UNIT
Supplies						
V_{DDA}	analog supply voltage	note 1	1.9	2.0	2.7	V
V_{DDD}	digital supply voltage	note 1	1.9	2.0	2.7	V
I_{DDA}	analog supply current	operating	–	3.0	–	mA
I_{DDD}	digital supply current	operating	–	1.5	–	mA

SYMBOL	PARAMETER	CONDITIONS	MIN.	TYP.	MAX.	UNIT
Digital inputs: pins BCK, WS, DATAI, SYSCLK, APPL0, APPL1, APPL2 and APPL3						
V_{IH}	HIGH-level input voltage		$0.8V_{DDD}$	–	–	V
V_{IL}	LOW-level input voltage		–	–	$0.2V_{DDD}$	V
$\lvert I_{LI} \rvert$	input leakage current		–	–	1	μA
C_I	input capacitance		–	–	10	pF
Three-level input: pin APPSEL						
V_{IH}	HIGH-level input voltage		$0.8V_{DDD}$	–	V_{DDD} + 0.5	V
V_{IM}	MIDDLE-level input voltage		$0.3V_{DDD}$	–	$0.7V_{DDD}$	V
V_{IL}	LOW-level input voltage		–0.5	–	$+0.2V_{DDD}$	V
DAC						
$V_{ref(DAC)}$	reference voltage	referenced to V_{SSA}	$0.45V_{DDA}$	$0.5V_{DDA}$	$0.55V_{DDA}$	V
$I_{o(max)}$	maximum output current	(THD + N)/S < 0.1%; R_L = 5 kΩ	–	0.16	–	mA
R_O	output resistance		–	0.15	2.0	Ω
R_L	load resistance		3	–	–	kΩ
C_L	load capacitance	note 2	–	–	50	pF

Notes

1. All supply connections must be made to the same external power supply unit.
2. When the DAC drives a capacitive load above 50 pF, a series resistance of 100 Ω must be used to prevent oscillations in the output operational amplifier.

AC CHARACTERISTICS

$V_{DDD} = V_{DDA}$ = 2.0 V; f_i = 1 kHz; T_{amb} = 25 °C; R_L = 5 kΩ; all voltages referenced to ground (pins V_{SSA} and V_{SSD}); unless otherwise specified.

SYMBOL	PARAMETER	CONDITIONS	MIN.	TYP.	MAX.	UNIT
DAC						
$V_{o(rms)}$	output voltage (RMS value)		–	500	–	mV
ΔV_o	unbalance voltage between channels		–	0.1	–	dB
(THD + N)/S	total harmonic distortion-plus-noise to signal ratio	at 0 dB	–	–83	–78	dB
		at –60 dB; A-weighted	–	–36	–	dB
S/N	signal-to-noise ratio	code = 0; A-weighted	–	97	–	dB
α_{cs}	channel separation		–	100	–	dB
PSRR	power supply ripple rejection ratio	f_{ripple} = 1 kHz; V_{ripple} = 100 mV (p-p)	–	50	–	dB

TIMING

V_{DDD} = V_{DDA} = 1.9 to 2.7 V; T_{amb} = –40 to +85 °C; R_L = 5 kΩ; all voltages referenced to ground (pins V_{SSA} and V_{SSD}); unless otherwise specified.

SYMBOL	PARAMETER	CONDITIONS	MIN.	TYP.	MAX.	UNIT
System clock (see Fig.7)						
T_{sys}	system clock cycle time	$f_{sys} = 256f_s$	78	88	488	ns
		$f_{sys} = 384f_s$	52	59	325	ns
		$f_{sys} = 512f_s$	39	44	244	ns
t_{CWL}	LOW-level system clock pulse width	f_{sys} < 19.2 MHz	$0.3T_{sys}$	–	$0.7T_{sys}$	ns
		$f_{sys} \geq$ 19.2 MHz	$0.4T_{sys}$	–	$0.6T_{sys}$	ns
t_{CWH}	HIGH-level system clock pulse width	f_{sys} < 19.2 MHz	$0.3T_{sys}$	–	$0.7T_{sys}$	ns
		$f_{sys} \geq$ 19.2 MHz	$0.4T_{sys}$	–	$0.6T_{sys}$	ns
Digital interface with I^2S-bus (see Fig.8)						
$T_{cy(BCK)}$	bit clock cycle time		300	–	–	ns
t_{BCKH}	bit clock HIGH time		100	–	–	ns
t_{BCKL}	bit clock LOW time		100	–	–	ns
t_r	rise time		–	–	20	ns
t_f	fall time		–	–	20	ns
$t_{su(DATAI)}$	data input set-up time		20	–	–	ns
$t_{h(DATAI)}$	data input hold time		0	–	–	ns
$t_{su(WS)}$	word select set-up time		20	–	–	ns
$t_{h(WS)}$	word select hold time		10	–	–	ns
Control L3 interface (see Figs 4 and 5)						
$T_{cy(CLK)L3}$	L3CLOCK cycle time		500	–	–	ns
$t_{CLK(L3)H}$	L3CLOCK HIGH time		250	–	–	ns
$t_{CLK(L3)L}$	L3CLOCK LOW time		250	–	–	ns
$t_{su(L3)A}$	L3MODE set-up time for address mode		190	–	–	ns
$t_{h(L3)A}$	L3MODE hold time for address mode		190	–	–	ns
$t_{su(L3)D}$	L3MODE set-up time for data transfer mode		190	–	–	ns
$t_{h(L3)D}$	L3MODE hold time for data transfer mode		190	–	–	ns
$t_{su(L3)DA}$	L3DATA set-up time for data transfer and address mode		190	–	–	ns
$t_{h(L3)DA}$	L3DATA hold time for data transfer and address mode		30	–	–	ns
$t_{stp(L3)}$	L3MODE stop time for data transfer mode		190	–	–	ns

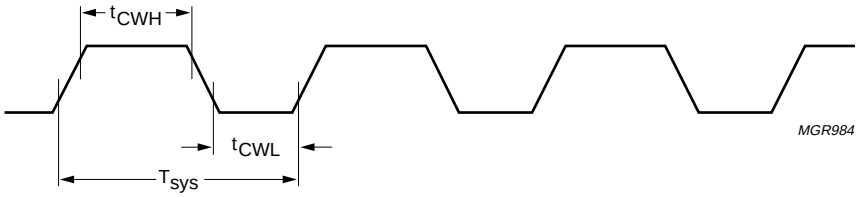

Fig.7 System clock timing.

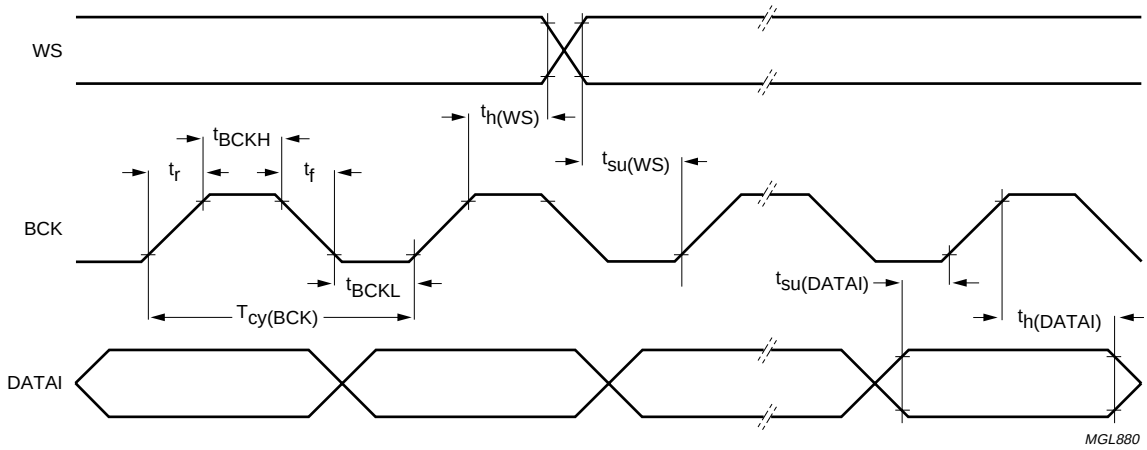

Fig.8 I^2S-bus timing.

APPLICATION INFORMATION

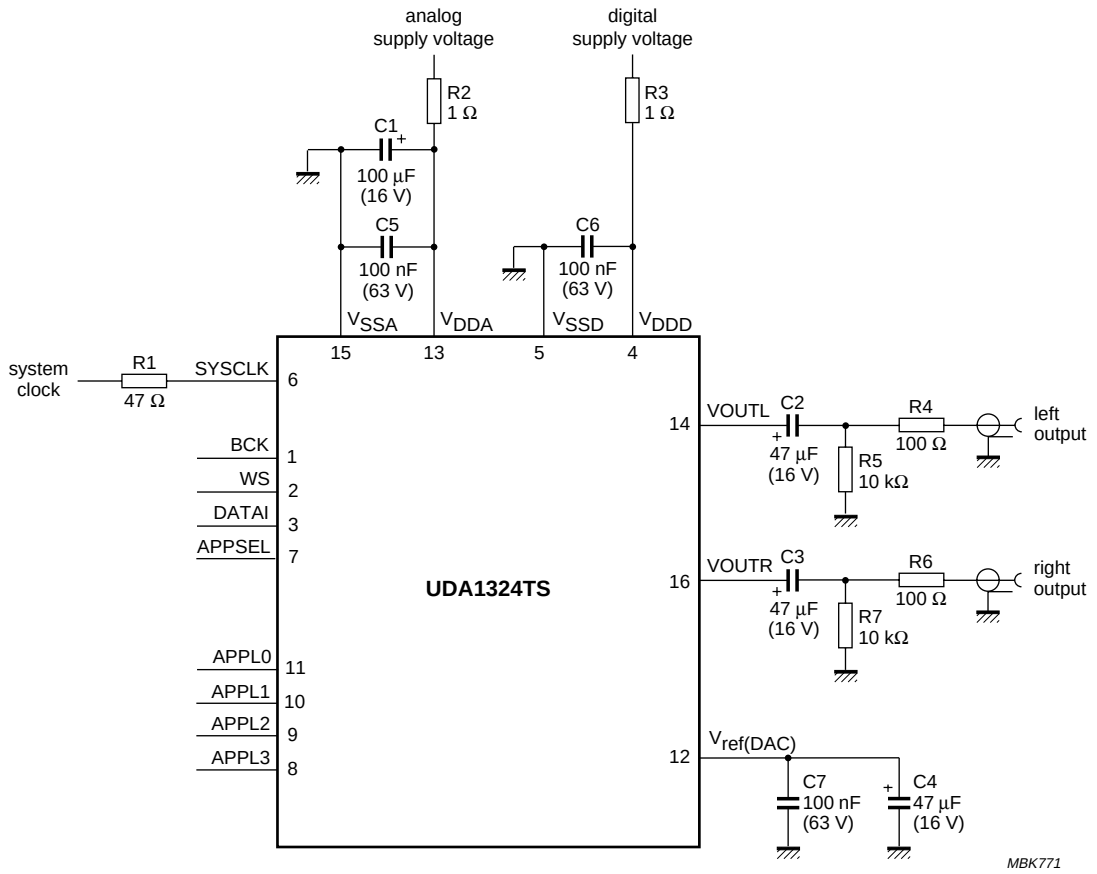

Fig.9 Application diagram.

PACKAGE OUTLINE

SSOP16: plastic shrink small outline package; 16 leads; body width 4.4 mm **SOT369-1**

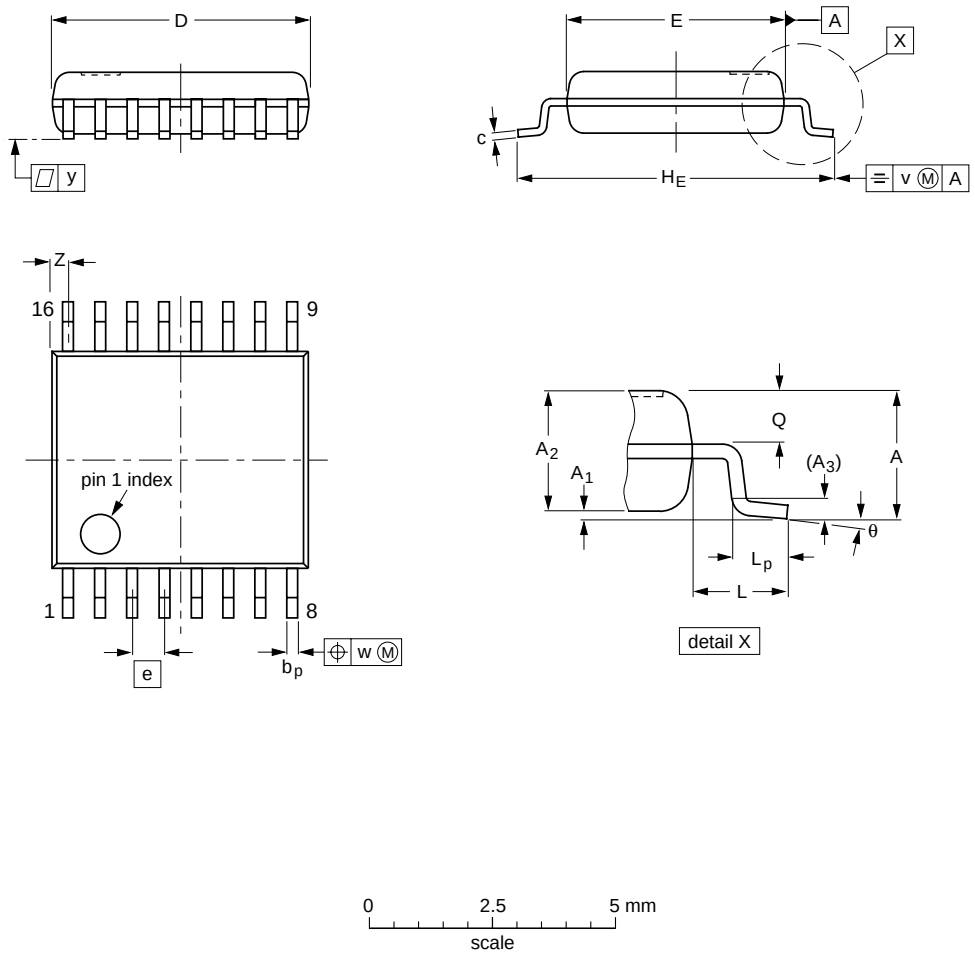

DIMENSIONS (mm are the original dimensions)

UNIT	A max.	A_1	A_2	A_3	b_p	c	D(1)	E(1)	e	H_E	L	L_p	Q	v	w	y	Z(1)	θ
mm	1.5	0.15 0.00	1.4 1.2	0.25	0.32 0.20	0.25 0.13	5.30 5.10	4.5 4.3	0.65	6.6 6.2	1.0	0.75 0.45	0.65 0.45	0.2	0.13	0.1	0.48 0.18	10° 0°

Note

1. Plastic or metal protrusions of 0.20 mm maximum per side are not included.

OUTLINE VERSION	REFERENCES				EUROPEAN PROJECTION	ISSUE DATE
	IEC	JEDEC	EIAJ			
SOT369-1		MO-152				~~95-02-04~~ 99-12-27

SOLDERING

Introduction to soldering surface mount packages

This text gives a very brief insight to a complex technology. A more in-depth account of soldering ICs can be found in our *"Data Handbook IC26; Integrated Circuit Packages"* (document order number 9398 652 90011).

There is no soldering method that is ideal for all surface mount IC packages. Wave soldering can still be used for certain surface mount ICs, but it is not suitable for fine pitch SMDs. In these situations reflow soldering is recommended.

Reflow soldering

Reflow soldering requires solder paste (a suspension of fine solder particles, flux and binding agent) to be applied to the printed-circuit board by screen printing, stencilling or pressure-syringe dispensing before package placement.

Several methods exist for reflowing; for example, convection or convection/infrared heating in a conveyor type oven. Throughput times (preheating, soldering and cooling) vary between 100 and 200 seconds depending on heating method.

Typical reflow peak temperatures range from 215 to 250 °C. The top-surface temperature of the packages should preferable be kept below 220 °C for thick/large packages, and below 235 °C for small/thin packages.

Wave soldering

Conventional single wave soldering is not recommended for surface mount devices (SMDs) or printed-circuit boards with a high component density, as solder bridging and non-wetting can present major problems.

To overcome these problems the double-wave soldering method was specifically developed.

If wave soldering is used the following conditions must be observed for optimal results:

- Use a double-wave soldering method comprising a turbulent wave with high upward pressure followed by a smooth laminar wave.
- For packages with leads on two sides and a pitch (e):
  - larger than or equal to 1.27 mm, the footprint longitudinal axis is **preferred** to be parallel to the transport direction of the printed-circuit board;
  - smaller than 1.27 mm, the footprint longitudinal axis **must** be parallel to the transport direction of the printed-circuit board.

  The footprint must incorporate solder thieves at the downstream end.
- For packages with leads on four sides, the footprint must be placed at a 45° angle to the transport direction of the printed-circuit board. The footprint must incorporate solder thieves downstream and at the side corners.

During placement and before soldering, the package must be fixed with a droplet of adhesive. The adhesive can be applied by screen printing, pin transfer or syringe dispensing. The package can be soldered after the adhesive is cured.

Typical dwell time is 4 seconds at 250 °C.
A mildly-activated flux will eliminate the need for removal of corrosive residues in most applications.

Manual soldering

Fix the component by first soldering two diagonally-opposite end leads. Use a low voltage (24 V or less) soldering iron applied to the flat part of the lead. Contact time must be limited to 10 seconds at up to 300 °C.

When using a dedicated tool, all other leads can be soldered in one operation within 2 to 5 seconds between 270 and 320 °C.

Suitability of surface mount IC packages for wave and reflow soldering methods

PACKAGE	SOLDERING METHOD	
	WAVE	REFLOW[1]
BGA, HBGA, LFBGA, SQFP, TFBGA	not suitable	suitable
HBCC, HLQFP, HSQFP, HSOP, HTQFP, HTSSOP, HVQFN, SMS	not suitable[2]	suitable
PLCC[3], SO, SOJ	suitable	suitable
LQFP, QFP, TQFP	not recommended[3][4]	suitable
SSOP, TSSOP, VSO	not recommended[5]	suitable

Notes

1. All surface mount (SMD) packages are moisture sensitive. Depending upon the moisture content, the maximum temperature (with respect to time) and body size of the package, there is a risk that internal or external package cracks may occur due to vaporization of the moisture in them (the so called popcorn effect). For details, refer to the Drypack information in the *"Data Handbook IC26; Integrated Circuit Packages; Section: Packing Methods"*.
2. These packages are not suitable for wave soldering as a solder joint between the printed-circuit board and heatsink (at bottom version) can not be achieved, and as solder may stick to the heatsink (on top version).
3. If wave soldering is considered, then the package must be placed at a 45° angle to the solder wave direction. The package footprint must incorporate solder thieves downstream and at the side corners.
4. Wave soldering is only suitable for LQFP, TQFP and QFP packages with a pitch (e) equal to or larger than 0.8 mm; it is definitely not suitable for packages with a pitch (e) equal to or smaller than 0.65 mm.
5. Wave soldering is only suitable for SSOP and TSSOP packages with a pitch (e) equal to or larger than 0.65 mm; it is definitely not suitable for packages with a pitch (e) equal to or smaller than 0.5 mm.

DATA SHEET STATUS

DATA SHEET STATUS(1)	PRODUCT STATUS(2)	DEFINITIONS
Objective data	Development	This data sheet contains data from the objective specification for product development. Philips Semiconductors reserves the right to change the specification in any manner without notice.
Preliminary data	Qualification	This data sheet contains data from the preliminary specification. Supplementary data will be published at a later date. Philips Semiconductors reserves the right to change the specification without notice, in order to improve the design and supply the best possible product.
Product data	Production	This data sheet contains data from the product specification. Philips Semiconductors reserves the right to make changes at any time in order to improve the design, manufacturing and supply. Changes will be communicated according to the Customer Product/Process Change Notification (CPCN) procedure SNW-SQ-650A.

Notes

1. Please consult the most recently issued data sheet before initiating or completing a design.
2. The product status of the device(s) described in this data sheet may have changed since this data sheet was published. The latest information is available on the Internet at URL http://www.semiconductors.philips.com.

DEFINITIONS

Short-form specification — The data in a short-form specification is extracted from a full data sheet with the same type number and title. For detailed information see the relevant data sheet or data handbook.

Limiting values definition — Limiting values given are in accordance with the Absolute Maximum Rating System (IEC 60134). Stress above one or more of the limiting values may cause permanent damage to the device. These are stress ratings only and operation of the device at these or at any other conditions above those given in the Characteristics sections of the specification is not implied. Exposure to limiting values for extended periods may affect device reliability.

Application information — Applications that are described herein for any of these products are for illustrative purposes only. Philips Semiconductors make no representation or warranty that such applications will be suitable for the specified use without further testing or modification.

DISCLAIMERS

Life support applications — These products are not designed for use in life support appliances, devices, or systems where malfunction of these products can reasonably be expected to result in personal injury. Philips Semiconductors customers using or selling these products for use in such applications do so at their own risk and agree to fully indemnify Philips Semiconductors for any damages resulting from such application.

Right to make changes — Philips Semiconductors reserves the right to make changes, without notice, in the products, including circuits, standard cells, and/or software, described or contained herein in order to improve design and/or performance. Philips Semiconductors assumes no responsibility or liability for the use of any of these products, conveys no licence or title under any patent, copyright, or mask work right to these products, and makes no representations or warranties that these products are free from patent, copyright, or mask work right infringement, unless otherwise specified.

Philips Semiconductors – a worldwide company

Argentina: see South America

Australia: 3 Figtree Drive, HOMEBUSH, NSW 2140,
Tel. +61 2 9704 8141, Fax. +61 2 9704 8139

Austria: Computerstr. 6, A-1101 WIEN, P.O. Box 213,
Tel. +43 1 60 101 1248, Fax. +43 1 60 101 1210

Belarus: Hotel Minsk Business Center, Bld. 3, r. 1211, Volodarski Str. 6,
220050 MINSK, Tel. +375 172 20 0733, Fax. +375 172 20 0773

Belgium: see The Netherlands

Brazil: see South America

Bulgaria: Philips Bulgaria Ltd., Energoproject, 15th floor,
51 James Bourchier Blvd., 1407 SOFIA,
Tel. +359 2 68 9211, Fax. +359 2 68 9102

Canada: PHILIPS SEMICONDUCTORS/COMPONENTS,
Tel. +1 800 234 7381, Fax. +1 800 943 0087

China/Hong Kong: 501 Hong Kong Industrial Technology Centre,
72 Tat Chee Avenue, Kowloon Tong, HONG KONG,
Tel. +852 2319 7888, Fax. +852 2319 7700

Colombia: see South America

Czech Republic: see Austria

Denmark: Sydhavnsgade 23, 1780 COPENHAGEN V,
Tel. +45 33 29 3333, Fax. +45 33 29 3905

Finland: Sinikalliontie 3, FIN-02630 ESPOO,
Tel. +358 9 615 800, Fax. +358 9 6158 0920

France: 7 - 9 Rue du Mont Valérien, BP317, 92156 SURESNES Cedex,
Tel. +33 1 4728 6600, Fax. +33 1 4728 6638

Germany: Hammerbrookstraße 69, D-20097 HAMBURG,
Tel. +49 40 2353 60, Fax. +49 40 2353 6300

Hungary: Philips Hungary Ltd., H-1119 Budapest, Fehervari ut 84/A,
Tel: +36 1 382 1700, Fax: +36 1 382 1800

India: Philips INDIA Ltd, Band Box Building, 2nd floor,
254-D, Dr. Annie Besant Road, Worli, MUMBAI 400 025,
Tel. +91 22 493 8541, Fax. +91 22 493 0966

Indonesia: PT Philips Development Corporation, Semiconductors Division,
Gedung Philips, Jl. Buncit Raya Kav.99-100, JAKARTA 12510,
Tel. +62 21 794 0040 ext. 2501, Fax. +62 21 794 0080

Ireland: Newstead, Clonskeagh, DUBLIN 14,
Tel. +353 1 7640 000, Fax. +353 1 7640 200

Israel: RAPAC Electronics, 7 Kehilat Saloniki St, PO Box 18053,
TEL AVIV 61180, Tel. +972 3 645 0444, Fax. +972 3 649 1007

Italy: PHILIPS SEMICONDUCTORS, Via Casati, 23 - 20052 MONZA (MI),
Tel. +39 039 203 6838, Fax +39 039 203 6800

Japan: Philips Bldg 13-37, Kohnan 2-chome, Minato-ku,
TOKYO 108-8507, Tel. +81 3 3740 5130, Fax. +81 3 3740 5057

Korea: Philips House, 260-199 Itaewon-dong, Yongsan-ku, SEOUL,
Tel. +82 2 709 1412, Fax. +82 2 709 1415

Malaysia: No. 76 Jalan Universiti, 46200 PETALING JAYA, SELANGOR,
Tel. +60 3 750 5214, Fax. +60 3 757 4880

Mexico: 5900 Gateway East, Suite 200, EL PASO, TEXAS 79905,
Tel. +9-5 800 234 7381, Fax +9-5 800 943 0087

Middle East: see Italy

Netherlands: Postbus 90050, 5600 PB EINDHOVEN, Bldg. VB,
Tel. +31 40 27 82785, Fax. +31 40 27 88399

New Zealand: 2 Wagener Place, C.P.O. Box 1041, AUCKLAND,
Tel. +64 9 849 4160, Fax. +64 9 849 7811

Norway: Box 1, Manglerud 0612, OSLO,
Tel. +47 22 74 8000, Fax. +47 22 74 8341

Pakistan: see Singapore

Philippines: Philips Semiconductors Philippines Inc.,
106 Valero St. Salcedo Village, P.O. Box 2108 MCC, MAKATI,
Metro MANILA, Tel. +63 2 816 6380, Fax. +63 2 817 3474

Poland: Al.Jerozolimskie 195 B, 02-222 WARSAW,
Tel. +48 22 5710 000, Fax. +48 22 5710 001

Portugal: see Spain

Romania: see Italy

Russia: Philips Russia, Ul. Usatcheva 35A, 119048 MOSCOW,
Tel. +7 095 755 6918, Fax. +7 095 755 6919

Singapore: Lorong 1, Toa Payoh, SINGAPORE 319762,
Tel. +65 350 2538, Fax. +65 251 6500

Slovakia: see Austria

Slovenia: see Italy

South Africa: S.A. PHILIPS Pty Ltd., 195-215 Main Road Martindale,
2092 JOHANNESBURG, P.O. Box 58088 Newville 2114,
Tel. +27 11 471 5401, Fax. +27 11 471 5398

South America: Al. Vicente Pinzon, 173, 6th floor,
04547-130 SÃO PAULO, SP, Brazil,
Tel. +55 11 821 2333, Fax. +55 11 821 2382

Spain: Balmes 22, 08007 BARCELONA,
Tel. +34 93 301 6312, Fax. +34 93 301 4107

Sweden: Kottbygatan 7, Akalla, S-16485 STOCKHOLM,
Tel. +46 8 5985 2000, Fax. +46 8 5985 2745

Switzerland: Allmendstrasse 140, CH-8027 ZÜRICH,
Tel. +41 1 488 2741 Fax. +41 1 488 3263

Taiwan: Philips Semiconductors, 5F, No. 96, Chien Kuo N. Rd., Sec. 1,
TAIPEI, Taiwan Tel. +886 2 2134 2451, Fax. +886 2 2134 2874

Thailand: PHILIPS ELECTRONICS (THAILAND) Ltd.,
60/14 MOO 11, Bangna Trad Road KM. 3, Bagna, BANGKOK 10260,
Tel. +66 2 361 7910, Fax. +66 2 398 3447

Turkey: Yukari Dudullu, Org. San. Blg., 2.Cad. Nr. 28 81260 Umraniye,
ISTANBUL, Tel. +90 216 522 1500, Fax. +90 216 522 1813

Ukraine: PHILIPS UKRAINE, 4 Patrice Lumumba str., Building B, Floor 7,
252042 KIEV, Tel. +380 44 264 2776, Fax. +380 44 268 0461

United Kingdom: Philips Semiconductors Ltd., 276 Bath Road, Hayes,
MIDDLESEX UB3 5BX, Tel. +44 208 730 5000, Fax. +44 208 754 8421

United States: 811 East Arques Avenue, SUNNYVALE, CA 94088-3409,
Tel. +1 800 234 7381, Fax. +1 800 943 0087

Uruguay: see South America

Vietnam: see Singapore

Yugoslavia: PHILIPS, Trg N. Pasica 5/v, 11000 BEOGRAD,
Tel. +381 11 3341 299, Fax.+381 11 3342 553

For all other countries apply to: Philips Semiconductors,
Marketing Communications, Building BE-p, P.O. Box 218, 5600 MD EINDHOVEN,
The Netherlands, Fax. +31 40 27 24825

Internet: http://www.semiconductors.philips.com

© Philips Electronics N.V. 2001

SCA 72

All rights are reserved. Reproduction in whole or in part is prohibited without the prior written consent of the copyright owner.

The information presented in this document does not form part of any quotation or contract, is believed to be accurate and reliable and may be changed without notice. No liability will be accepted by the publisher for any consequence of its use. Publication thereof does not convey nor imply any license under patent- or other industrial or intellectual property rights.

Printed in The Netherlands 753503/04/pp20 Date of release: 2001 Mar 27 Document order number: 9397 750 08099

Let's make things better.

Philips Semiconductors

PHILIPS