FAIRCHILD SEMICONDUCTOR®

September 1996
Revised January 2005

NC7SZ32
TinyLogic® UHS 2-Input OR Gate

General Description

The NC7SZ32 is a single 2-Input OR Gate from Fairchild's Ultra High Speed Series of TinyLogic®. The device is fabricated with advanced CMOS technology to achieve ultra high speed with high output drive while maintaining low static power dissipation over a very broad V_{CC} operating range. The device is specified to operate over the 1.65V to 5.5V V_{CC} range. The inputs and output are high impedance when V_{CC} is 0V. Inputs tolerate voltages up to 6V independent of V_{CC} operating voltage.

Features

- Space saving SOT23 or SC70 5-lead package
- Ultra small MicroPak™ Pb-Free leadless package
- Ultra high speed t_{PD} 2.4 ns Typ into 50 pF at 5V V_{CC}
- High output drive ±24 mA at 3V V_{CC}
- Broad V_{CC} operating range 1.65V–5.5V
- Matches the performance of LCX when operated at 3.3V V_{CC}
- Power down high impedance inputs/output
- Overvoltage tolerant inputs facilitate 5V–3V translation
- Patented noise/EMI reduction circuitry implemented

Ordering Code:

Order Number	Package Number	Product Code Top Mark	Package Description	Supplied As
NC7SZ32M5X	MA05B	7Z32	5-Lead SOT23, JEDEC MO-178, 1.6mm	3k Units on Tape and Reel
NC7SZ32M5X_NL (Note 1)	MA05B	7Z32	Pb-Free 5-Lead SOT23, JEDEC MO-178, 1.6mm	3k Units on Tape and Reel
NC7SZ32P5X	MAA05A	Z32	5-Lead SC70, EIAJ SC-88a, 1.25mm Wide	3k Units on Tape and Reel
NC7SZ32P5X_NL (Note 1)	MAA05A	Z32	Pb-Free 5-Lead SC70, EIAJ SC-88a, 1.25mm Wide	3k Units on Tape and Reel
NC7SZ32L6X	MAC06A	HH	Pb-Free 6-Lead MicroPak, 1.0mm Wide	5k Units on Tape and Reel

Note 1: "_NL" indicates Pb-Free product (per JEDEC J-STD-020B). Device is available in Tape and Reel only.

TinyLogic® is a registered trademark of Fairchild Semiconductor Corporation.
MicroPak™ is a trademark of Fairchild Semiconductor Corporation.

Downloaded from Elcodis.com electronic components distributor

Logic Symbol

IEEE/IEC

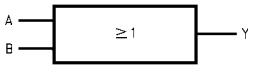

Pin Descriptions

Pin Names	Description
A, B	Inputs
Y	Output
NC	No Connect

Function Table

Y = A + B

Input		Output
A	**B**	**Y**
L	L	L
L	H	H
H	L	H
H	H	H

H = HIGH Logic Level L = LOW Logic Level

Connection Diagrams

Pin Assignments for SC70 and SOT23

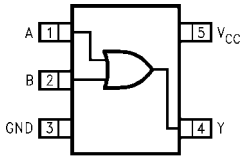

(Top View)

Pad Assignments for MicroPak

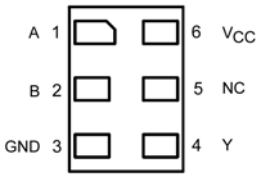

(Top Thru View)

Downloaded from Elcodis.com electronic components distributor

Absolute Maximum Ratings (Note 2)

Supply Voltage (V_{CC})	−0.5Vto +6V
DC Input Voltage (V_{IN})	−0.5V to +6V
DC Output Voltage (V_{OUT})	−0.5V to +6V
DC Input Diode Current (I_{IK})	
@V_{IN} < −0.5V	−50 mA
@V_{IN} >6V	+20 mA
DC Output Diode Current (I_{OK})	
@V_{OUT}< −0.5V	−50 mA
@V_{OUT} >6V, (V_{CC} = GND)	+20 mA
DC Output Current (I_{OUT})	±50 mA
DC V_{CC}/GND Current (I_{CC}/I_{GND})	±50 mA
Storage Temperature (T_{STG})	−65°C to +150°C
Junction Temperature under Bias (T_J)	150°C
Junction Lead Temperature (T_L);	
Soldering, 10 seconds	260°C
Power Dissipation (P_D) @ +85°C	
SOT23-5	200 mW
SC70-5	150 mW

Recommended Operating Conditions (Note 3)

Supply Voltage Operating (V_{CC})	1.65V to 5.5
Supply Voltage Data Retention (V_{CC})	1.5V to 5.5V
Input Voltage (V_{IN})	0V to 5.5V
Output Voltage (V_{OUT})	0V to V_{CC}
Operating Temperature (T_A)	−40°C to +85°C
Input Rise and Fall Time (t_r, t_f)	
V_{CC} = 1.8V, 2.5V ± 0.2V	0 ns/V to 20 ns/V
V_{CC} = 3.3V ± 0.3V	0 ns/V to 10 ns/V
V_{CC} = 5.0V ± 0.5V	0 ns/V to 5 ns/V
Thermal Resistance (θ_{JA})	
SOT23-5	300°C/W
SC70-5	425°C/W

Note 2: Absolute Maximum Ratings are DC values beyond which the device may be damaged or have its useful life impaired. The datasheet specifications should be met, without exception, to ensure that the system design is reliable over its power supply, temperature, and output/input loading variables. Fairchild does not recommend operation outside datasheet specifications.

Note 3: Unused inputs must be held HIGH or LOW. They may not float.

DC Electrical Characteristics

Symbol	Parameter	V_{CC} (V)	T_A = +25°C Min	Typ	Max	T_A = −40°C to +85°C Min	Max	Units	Conditions	
V_{IH}	HIGH Level Input Voltage	1.65 to 1.95	0.75 V_{CC}			0.75 V_{CC}		V		
		2.3 to 5.5	0.7 V_{CC}			0.7 V_{CC}				
V_{IL}	LOW Level Input Voltage	1.65 to 1.95			0.25 V_{CC}		0.25 V_{CC}	V		
		2.3 to 5.5			0.3 V_{CC}		0.3 V_{CC}			
V_{OH}	HIGH Level Output Voltage	1.65	1.55	1.65		1.55		V	V_{IN} = V_{IH}	I_{OH} = −100 μA
		1.8	1.7	1.8		1.7				
		2.3	2.2	2.3		2.2				
		3.0	2.9	3.0		2.9				
		4.5	4.4	4.5		4.4				
		1.65	1.29	1.52		1.29		V		I_{OH} = −4 mA
		2.3	1.9	2.15		1.9				I_{OH} = −8 mA
		3.0	2.4	2.80		2.4				I_{OH} = −16 mA
		3.0	2.3	2.68		2.3				I_{OH} = −24 mA
		4.5	3.8	4.20		3.8				I_{OH} = −32 mA
V_{OL}	LOW Level Output Voltage	1.65		0.0	0.1		0.1	V	V_{IN} = V_{IL}	I_{OL} = 100 μA
		1.8		0.0	0.1		0.1			
		2.3		0.0	0.1		0.1			
		3.0		0.0	0.1		0.1			
		4.5		0.0	0.1		0.1			
		1.65		0.08	0.24		0.24	V		I_{OL} = 4 mA
		2.3		0.10	0.3		0.3			I_{OL} = 8 mA
		3.0		0.15	0.4		0.4			I_{OL} = 16 mA
		3.0		0.22	0.55		0.55			I_{OL} = 24 mA
		4.5		0.22	0.55		0.55			I_{OL} = 32 mA
I_{IN}	Input Leakage Current	0 to 5.5			±1		±10	μA	V_{IN} = 5.5V, GND	
I_{OFF}	Power Off Leakage Current	0.0			1		10	μA	V_{IN} or V_{OUT} = 5.5V	
I_{CC}	Quiescent Supply Current	1.65 to 5.5			2.0		20	μA	V_{IN} = 5.5V, GND	

Downloaded from Elcodis.com electronic components distributor

AC Electrical Characteristics

Symbol	Parameter	V_{CC} (V)	$T_A = +25°C$ Min	Typ	Max	$T_A = -40°C$ to $+85°C$ Min	Max	Units	Conditions	Figure Number
t_{PLH}, t_{PHL}	Propagation Delay	1.65	2.0	5.5	12.0	2.0	12.7	ns	C_L = 15 pF, R_L = 1MΩ	Figures 1, 3
		1.8	2.0	4.6	10	2.0	10.5			
		2.5 ± 0.2	0.8	3.0	7.0	0.8	7.5			
		3.3 ± 0.3	0.5	2.4	4.7	0.5	5.0			
		5.0 ± 0.5	0.5	1.9	4.1	0.5	4.4			
t_{PLH}, t_{PHL}	Propagation Delay	3.3 ± 0.3	1.5	3.0	5.2	1.5	5.5	ns	C_L = 50 pF, R_L = 500Ω	Figures 1, 3
		5.0 ± 0.5	0.8	2.4	4.5	0.8	4.8			
C_{IN}	Input Capacitance	0		4				pF		
C_{PD}	Power Dissipation Capacitance	3.3		20				pF	(Note 4)	Figure 2
		5.0		26						

Note 4: C_{PD} is defined as the value of the internal equivalent capacitance which is derived from dynamic operating current consumption (I_{CCD}) at no output loading and operating at 50% duty cycle. (See Figure 2.) C_{PD} is related to I_{CCD} dynamic operating current by the expression:
$I_{CCD} = (C_{PD})(V_{CC})(f_{IN}) + (I_{CC}static)$.

AC Loading and Waveforms

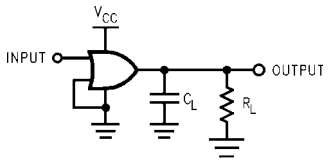

C_L includes load and stray capacitance.

Input PRR = 1.0 MHz, t_w = 500 ns.

FIGURE 1. AC Test Circuit

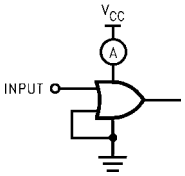

Input = AC Waveforms; $t_r = t_f$ = 1.8 ns;

PRR = 10 MHz; Duty Cycle = 50%

FIGURE 2. I_{CCD} Test Circuit

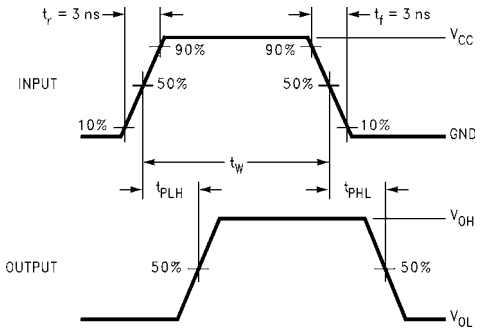

FIGURE 3. AC Waveforms

Downloaded from Elcodis.com electronic components distributor

Tape and Reel Specification

TAPE FORMAT for SC70 and SOT23

Package Designator	Tape Section	Number Cavities	Cavity Status	Cover Tape Status
M5X, P5X	Leader (Start End)	125 (typ)	Empty	Sealed
	Carrier	3000	Filled	Sealed
	Trailer (Hub End)	75 (typ)	Empty	Sealed

TAPE DIMENSIONS inches (millimeters)

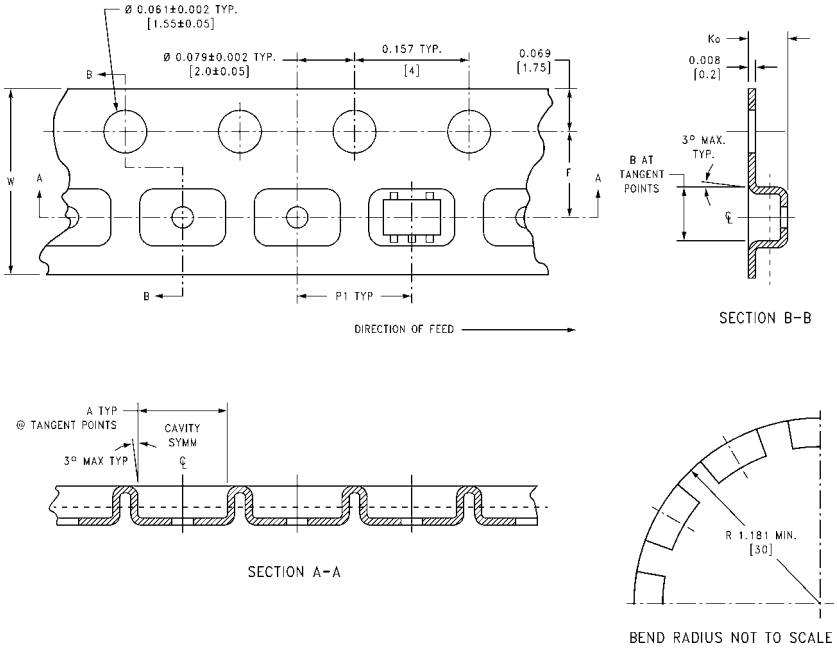

Package	Tape Size	DIM A	DIM B	DIM F	DIM K_o	DIM P1	DIM W
SC70-5	8 mm	0.093 (2.35)	0.096 (2.45)	0.138 ± 0.004 (3.5 ± 0.10)	0.053 ± 0.004 (1.35 ± 0.10)	0.157 (4)	0.315 ± 0.004 (8 ± 0.1)
SOT23-5	8 mm	0.130 (3.3)	0.130 (3.3)	0.138 ± 0.002 (3.5 ± 0.05)	0.055 ± 0.004 (1.4 ± 0.11)	0.157 (4)	0.315 ± 0.012 (8 ± 0.3)

Downloaded from Elcodis.com electronic components distributor

Tape and Reel Specification (Continued)

TAPE FORMAT for MicroPak

Package Designator	Tape Section	Number Cavities	Cavity Status	Cover Tape Status
L6X	Leader (Start End)	125 (typ)	Empty	Sealed
	Carrier	5000	Filled	Sealed
	Trailer (Hub End)	75 (typ)	Empty	Sealed

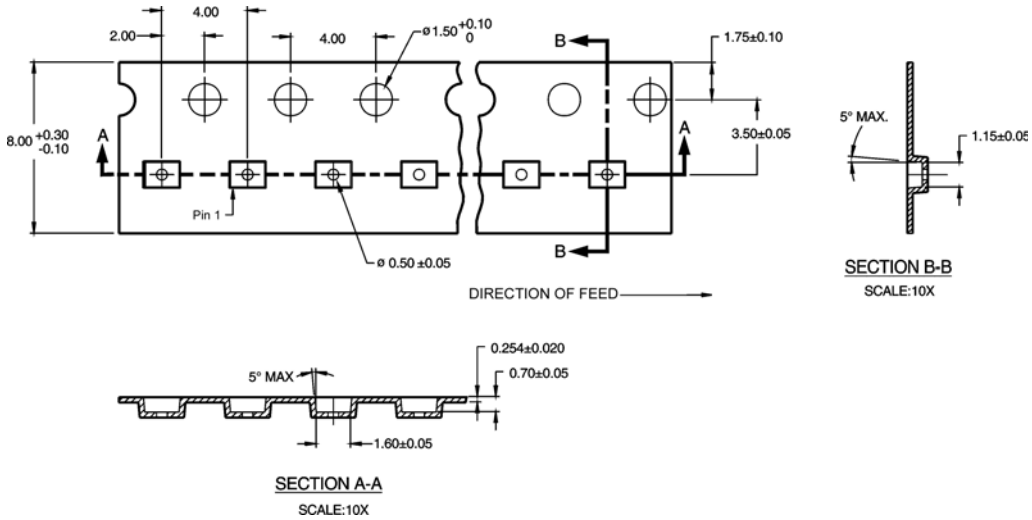

REEL DIMENSIONS inches (millimeters)

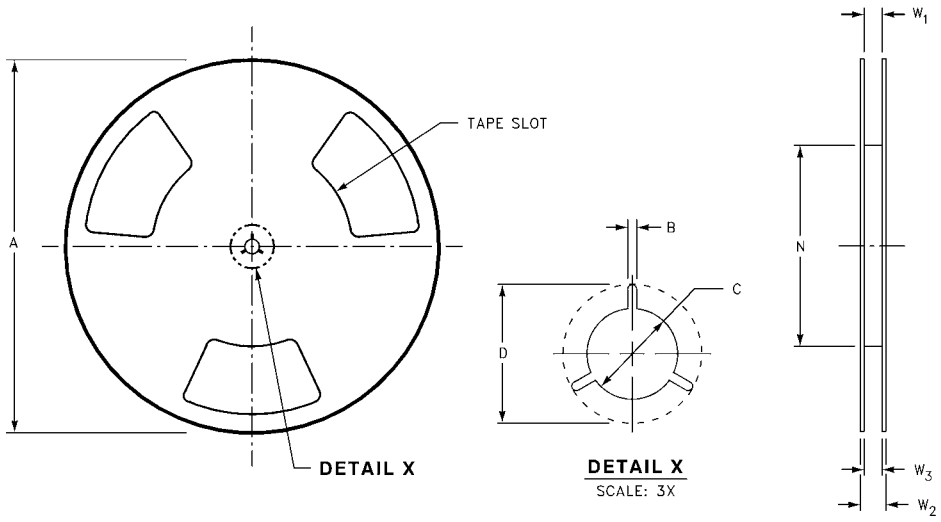

Tape Size	A	B	C	D	N	W1	W2	W3
8 mm	7.0 (177.8)	0.059 (1.50)	0.512 (13.00)	0.795 (20.20)	2.165 (55.00)	0.331 + 0.059/–0.000 (8.40 + 1.50/–0.00)	0.567 (14.40)	W1 + 0.078/–0.039 (W1 + 2.00/–1.00)

Downloaded from Elcodis.com electronic components distributor

Physical Dimensions inches (millimeters) unless otherwise noted

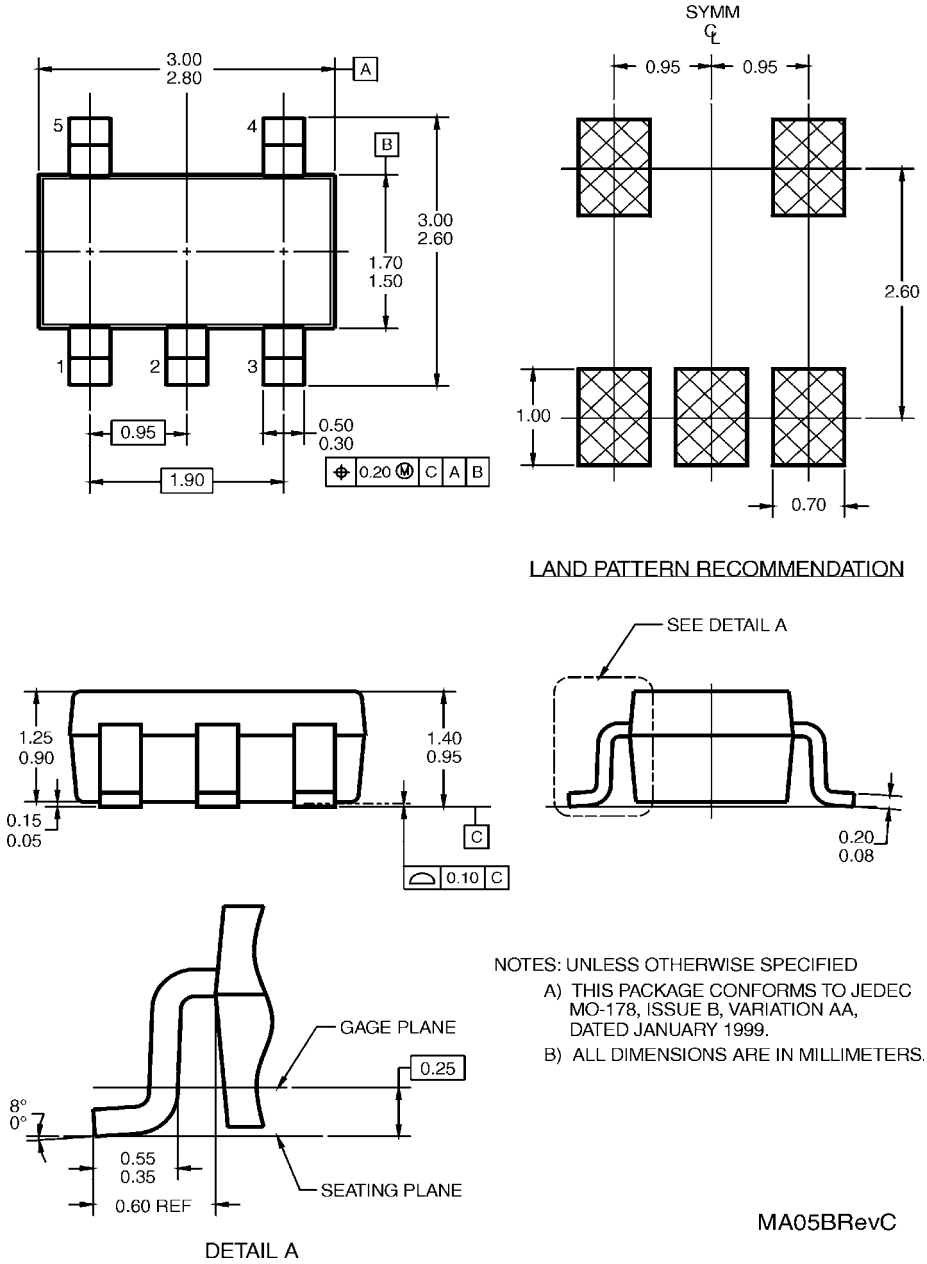

NOTES: UNLESS OTHERWISE SPECIFIED

A) THIS PACKAGE CONFORMS TO JEDEC MO-178, ISSUE B, VARIATION AA, DATED JANUARY 1999.

B) ALL DIMENSIONS ARE IN MILLIMETERS.

MA05BRevC

5-Lead SOT23, JEDEC MO-178, 1.6mm
Package Number MA05B

Downloaded from Elcodis.com electronic components distributor

Physical Dimensions inches (millimeters) unless otherwise noted (Continued)

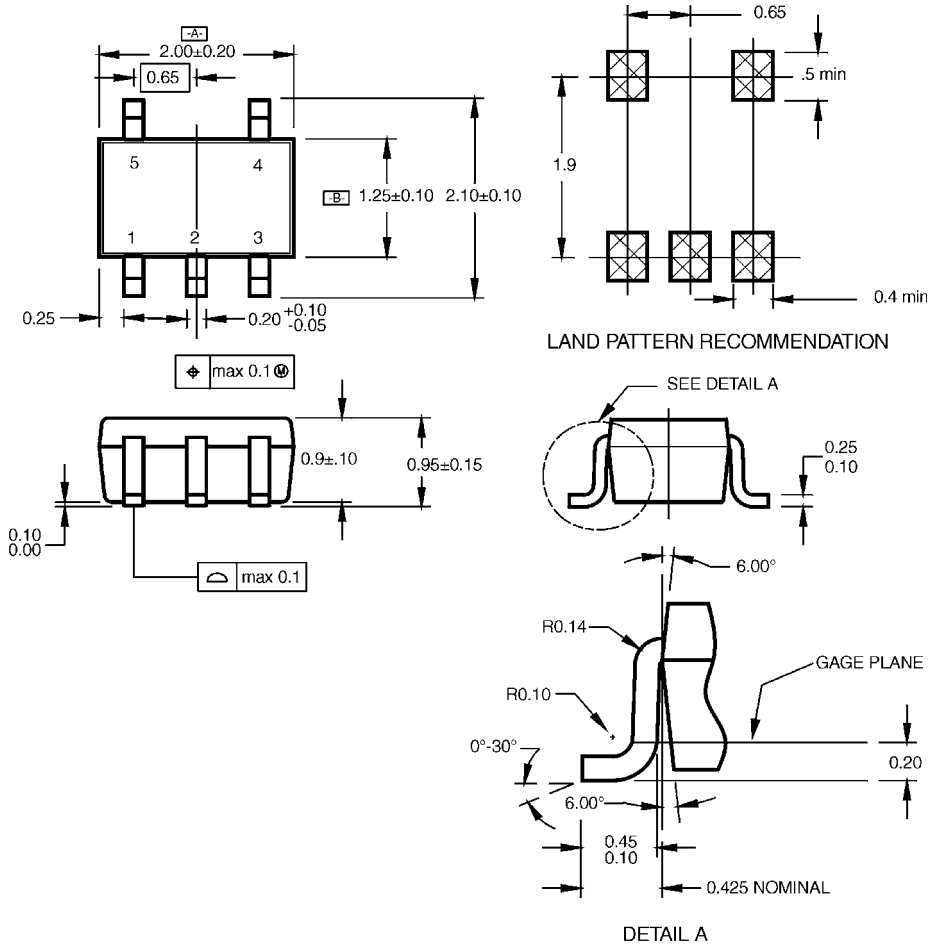

NOTES:

A. CONFORMS TO EIAJ REGISTERED OUTLINE DRAWING SC88A.
B. DIMENSIONS DO NOT INCLUDE BURRS OR MOLD FLASH.
C. DIMENSIONS ARE IN MILLIMETERS.

MAA05ARevC

5-Lead SC70, EIAJ SC-88a, 1.25mm Wide
Package Number MAA05A

Downloaded from Elcodis.com electronic components distributor

Physical Dimensions inches (millimeters) unless otherwise noted (Continued)

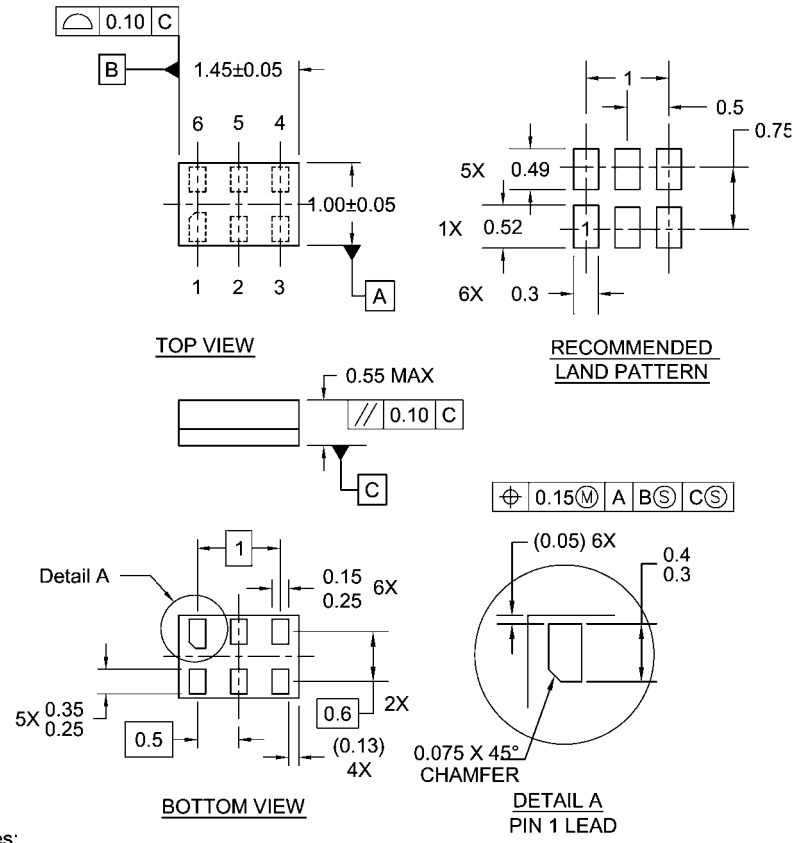

Notes:

1. JEDEC PACKAGE REGISTRATION IS ANTICIPATED
2. DIMENSIONS ARE IN MILLIMETERS
3. DRAWING CONFORMS TO ASME Y14.5M-1994

MAC06ARevB

Pb-Free 6-Lead MicroPak, 1.0mm Wide
Package Number MAC06A

Fairchild does not assume any responsibility for use of any circuitry described, no circuit patent licenses are implied and Fairchild reserves the right at any time without notice to change said circuitry and specifications.

LIFE SUPPORT POLICY

FAIRCHILD'S PRODUCTS ARE NOT AUTHORIZED FOR USE AS CRITICAL COMPONENTS IN LIFE SUPPORT DEVICES OR SYSTEMS WITHOUT THE EXPRESS WRITTEN APPROVAL OF THE PRESIDENT OF FAIRCHILD SEMICONDUCTOR CORPORATION. As used herein:

1. Life support devices or systems are devices or systems which, (a) are intended for surgical implant into the body, or (b) support or sustain life, and (c) whose failure to perform when properly used in accordance with instructions for use provided in the labeling, can be reasonably expected to result in a significant injury to the user.
2. A critical component in any component of a life support device or system whose failure to perform can be reasonably expected to cause the failure of the life support device or system, or to affect its safety or effectiveness.

www.fairchildsemi.com

Downloaded from Elcodis.com electronic components distributor