HEF4517B

Dual 64-bit static shift register

Rev. 06 — 10 December 2009 Product data sheet

1. General description

The HEF4517B consists of two identical, independent 64-bit static shift registers. Each register has separate clock (nCP), data input (nD), parallel input-enable/output-enable (nPE/$\overline{OE}$) and four 3-state outputs of the 16th, 32nd, 48th, and 64th bit positions (nQ16 to nQ64). Data at the nD input is entered into the first bit on the LOW-to-HIGH transition of the clock, regardless of the state of nPE/$\overline{OE}$.

When nPE/$\overline{OE}$ is LOW, the outputs are enabled and it is in the 64-bit serial mode.

When nPE/$\overline{OE}$ is HIGH, the outputs are disabled (high-impedance OFF-state), the 64-bit shift register is divided into four 16-bit shift registers with nD, nQ16, nQ32 and nQ48 as data inputs of the 1st, 17th, 33rd, and 49th bit respectively. Schmitt-trigger action in the clock input makes the circuit highly tolerant of slower clock rise and fall times.

It operates over a recommended V_{DD} power supply range of 3 V to 15 V referenced to V_{SS} (usually ground). Unused inputs must be connected to V_{DD}, V_{SS}, or another input. It is also suitable for use over the full industrial (–40 °C to +85 °C) temperature range.

2. Features

- Tolerant of slow clock rise and fall times
- Fully static operation
- 5 V, 10 V, and 15 V parametric ratings
- Standardized symmetrical output characteristics
- Operates across the full industrial temperature range –40 °C to +85 °C
- Complies with JEDEC standard JESD 13-B

3. Applications

- Industrial

4. Ordering information

Table 1. Ordering information

All types operate from –40 °C to +85 °C

Type number	Package		
	Name	Description	Version
HEF4517BP	DIP16	plastic dual in-line package; 16 leads (300 mil)	SOT38-4
HEF4517BT	SO16	plastic small outline package; 16 leads; body width 7.5 mm	SOT162-1

5. Functional diagram

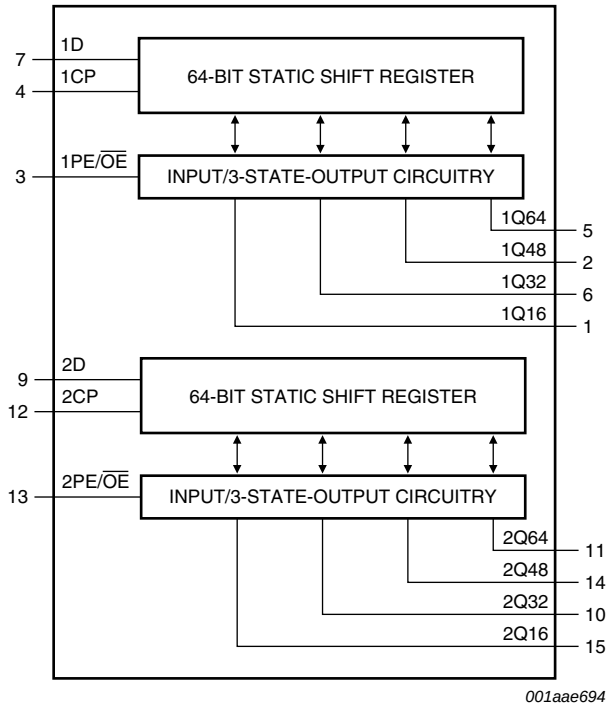

Fig 1. Functional diagram

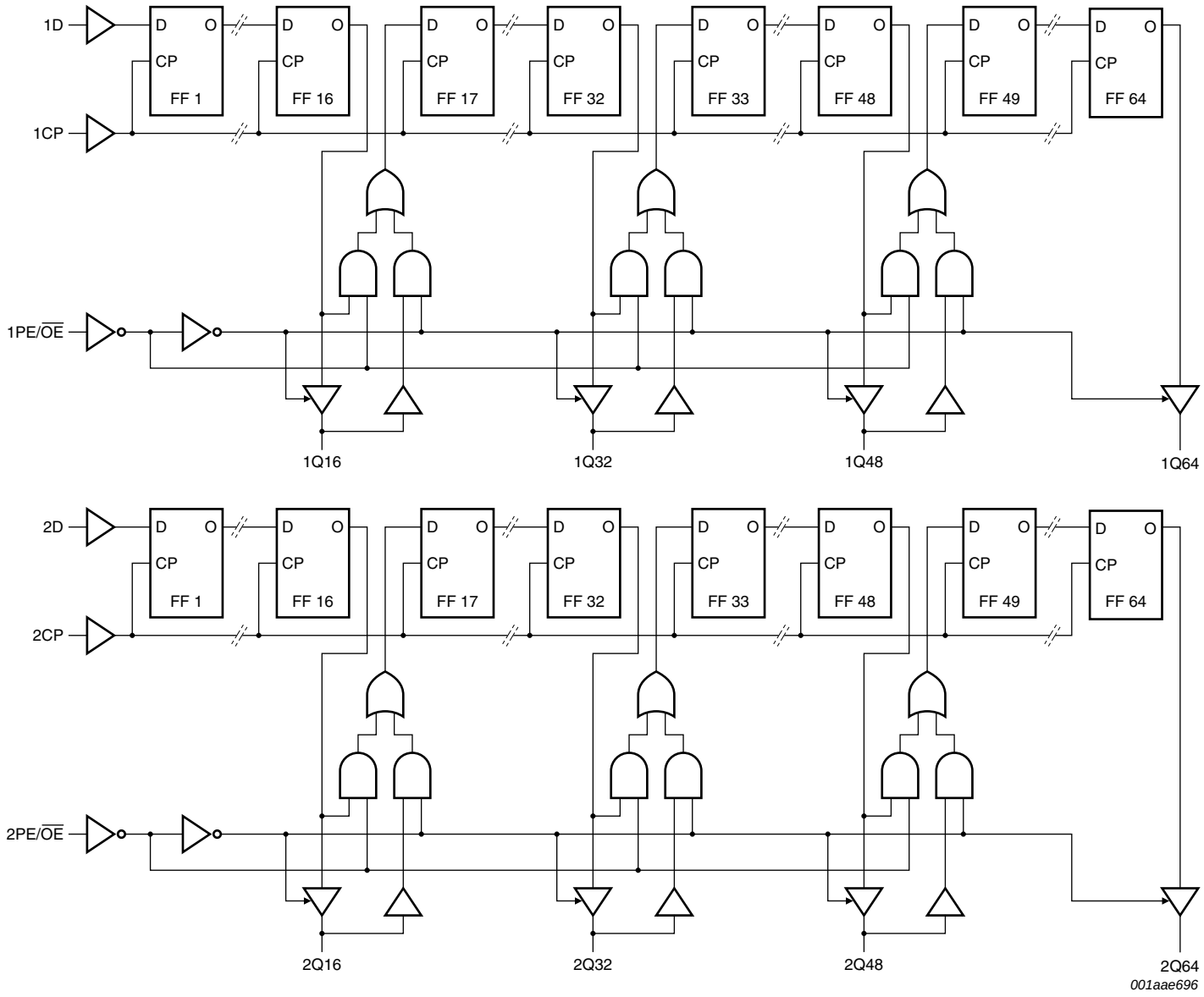

Fig 2. Logic diagram

6. Pinning information

6.1 Pinning

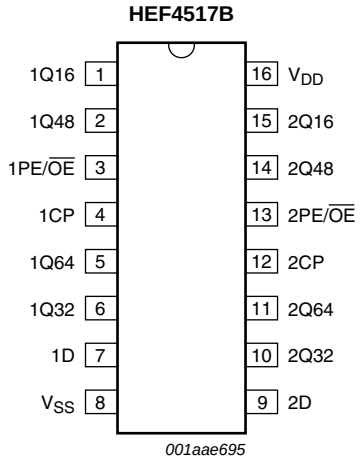

Fig 3. Pin configuration

6.2 Pin description

Table 2. Pin description

Symbol	Pin	Description
1Q16, 2Q16	1, 15	3-state input/output
1Q48, 2Q48	2, 14	3-state input/output
1PE/$\overline{OE}$, 2PE/$\overline{OE}$	3, 13	parallel input-enable/output-enable input
1CP, 2CP	4, 12	clock input
1Q64, 2Q64	5, 11	3-state input/output
1Q32, 2Q32	6, 10	3-state input/output
1D, 2D	7, 9	data input
V_{SS}	8	ground supply voltage
V_{DD}	16	supply voltage

7. Functional description

Table 3. Function table[1]

Inputs			Inputs/outputs				Mode
nCP	nD	nPE/$\overline{OE}$	nQ16	nQ32	nQ48	nQ64	
↑	data entered into 1st bit	L	content of 16th bit displayed	content of 32nd bit displayed	content of 48th bit displayed	content of 64th bit displayed	One 64-bit shift register. The content of the shift register is shifted over one stage
↑	data entered into 1st bit	H	data at nQ16 entered into 17th bit	data at nQ32 entered into 33rd bit	data at nQ48 entered into 49th bit	remains in 'Z' state	Four 16-bit shift register. The content of the shift registers is shifted over one stage
↓	X	L	no change	no change	no change	no change	no change
↓	X	H	Z	Z	Z	Z	no change

[1] H = HIGH voltage level; L = LOW voltage level; X = don't care; Z = high-impedance state; ↑ = positive-going transition; ↓ = negative-going transition.

8. Limiting values

Table 4. Limiting values

In accordance with the Absolute Maximum Rating System (IEC 60134).

Symbol	Parameter	Conditions		Min	Max	Unit
V_{DD}	supply voltage			–0.5	+18	V
I_{IK}	input clamping current	$V_I < -0.5$ V or $V_I > V_{DD} + 0.5$ V		-	±10	mA
V_I	input voltage			–0.5	$V_{DD} + 0.5$	V
I_{OK}	output clamping current	$V_O < -0.5$ V or $V_O > V_{DD} + 0.5$ V		-	±10	mA
$I_{I/O}$	input/output current			-	±10	mA
I_{DD}	supply current			-	50	mA
T_{stg}	storage temperature			–65	+150	°C
T_{amb}	ambient temperature			–40	+85	°C
P_{tot}	total power dissipation	DIP16 package	[1]	-	750	mW
		SO16 package	[2]	-	500	mW
P	power dissipation	per output		-	100	mW

[1] For DIP16 package: P_{tot} derates linearly with 12 mW/K above 70 °C.

[2] For SO16 package: P_{tot} derates linearly with 8 mW/K above 70 °C.

9. Recommended operating conditions

Table 5. Recommended operating conditions

Symbol	Parameter	Conditions	Min	Typ	Max	Unit
V_{DD}	supply voltage		3	-	15	V
V_I	input voltage		0	-	V_{DD}	V
T_{amb}	ambient temperature	in free air	–40	-	+85	°C
$\Delta t/\Delta V$	input transition rise and fall rate	V_{DD} = 5 V	-	-	3.75	μs/V
		V_{DD}= 10 V	-	-	0.5	μs/V
		V_{DD}= 15 V	-	-	0.08	μs/V

10. Static characteristics

Table 6. Static characteristics

V_{SS} = 0 V; V_I = V_{SS} or V_{DD} unless otherwise specified.

Symbol	Parameter	Conditions	V_{DD}	T_{amb} = –40 °C		T_{amb} = 25 °C		T_{amb} = 85 °C		Unit
				Min	Max	Min	Max	Min	Max	
V_{IH}	HIGH-level input voltage	$\|I_O\|$ < 1 μA	5 V	3.5	-	3.5	-	3.5	-	V
			10 V	7.0	-	7.0	-	7.0	-	V
			15 V	11.0	-	11.0	-	11.0	-	V
V_{IL}	LOW-level input voltage	$\|I_O\|$ < 1 μA	5 V	-	1.5	-	1.5	-	1.5	V
			10 V	-	3.0	-	3.0	-	3.0	V
			15 V	-	4.0	-	4.0	-	4.0	V
V_{OH}	HIGH-level output voltage	$\|I_O\|$ < 1 μA	5 V	4.95	-	4.95	-	4.95	-	V
			10 V	9.95	-	9.95	-	9.95	-	V
			15 V	14.95	-	14.95	-	14.95	-	V
V_{OL}	LOW-level output voltage	$\|I_O\|$ < 1 μA	5 V	-	0.05	-	0.05	-	0.05	V
			10 V	-	0.05	-	0.05	-	0.05	V
			15 V	-	0.05	-	0.05	-	0.05	V
I_{OH}	HIGH-level output current	V_O = 2.5 V	5 V	–1.7	-	–1.4	-	–1.1	-	mA
		V_O = 4.6 V	5 V	–0.52	-	–0.44	-	–0.36	-	mA
		V_O = 9.5 V	10 V	–1.3	-	–1.1	-	–0.9	-	mA
		V_O = 13.5 V	15 V	–3.6	-	–3.0	-	–2.4	-	mA
I_{OL}	LOW-level output current	V_O = 0.4 V	5 V	0.52	-	0.44	-	0.36	-	mA
		V_O = 0.5 V	10 V	1.3	-	1.1	-	0.9	-	mA
		V_O = 1.5 V	15 V	3.6	-	3.0	-	2.4	-	mA
I_I	input leakage current		15 V	-	±0.3	-	±0.3	-	±1.0	μA
I_{DD}	supply current	I_O = 0 A	5 V	-	50	-	50	-	375	μA
			10 V	-	100	-	100	-	750	μA
			15 V	-	200	-	200	-	1500	μA
C_I	input capacitance		-	-	-	-	7.5	-	-	pF

11. Dynamic characteristics

Table 7. Dynamic characteristics

V_{SS} = 0 V; T_{amb} = 25 °C; for test circuit see Figure 8; unless otherwise specified.

Symbol	Parameter	Conditions	V_{DD}		Extrapolation formula	Min	Typ	Max	Unit
t_{PHL}	HIGH to LOW propagation delay	nCP to nQn; see Figure 4	5 V	[1]	193 ns + (0.55 ns/pF)C_L	-	220	440	ns
			10 V		74 ns + (0.23 ns/pF)C_L	-	85	170	ns
			15 V		52 ns + (0.16 ns/pF)C_L	-	60	120	ns
t_{PLH}	LOW to HIGH propagation delay	nCP to nQn; see Figure 4	5 V	[1]	163 ns + (0.55 ns/pF)C_L	-	190	380	ns
			10 V		64 ns + (0.23 ns/pF)C_L	-	75	150	ns
			15 V		42 ns + (0.16 ns/pF)C_L	-	50	100	ns
t_{PHZ}	HIGH to OFF-state propagation delay	nPE/$\overline{OE}$ to nQn; see Figure 5	5 V			-	40	80	ns
			10 V			-	30	60	ns
			15 V			-	25	50	ns
t_{PZH}	OFF-state to HIGH propagation delay	nPE/$\overline{OE}$ to nQn; see Figure 5	5 V			-	45	90	ns
			10 V			-	25	50	ns
			15 V			-	20	40	ns
t_{PLZ}	LOW to OFF-state propagation delay	nPE/$\overline{OE}$ to nQn; see Figure 5	5 V			-	50	100	ns
			10 V			-	30	60	ns
			15 V			-	25	50	ns
t_{PZL}	OFF-state to LOW propagation delay	nPE/$\overline{OE}$ to nQn; see Figure 5	5 V			-	60	120	ns
			10 V			-	30	60	ns
			15 V			-	25	50	ns
t_t	transition time	nQn; see Figure 6	5 V	[1]	10 ns + (1.00 ns/pF)C_L	-	60	120	ns
			10 V		9 ns + (0.42 ns/pF)C_L	-	30	60	ns
			15 V		6 ns + (0.28 ns/pF)C_L	-	20	40	ns
t_{su}	set-up time	nQn, nD to nCP; see Figure 7	5 V			30	10	-	ns
			10 V			25	5	-	ns
			15 V			20	5	-	ns
t_h	hold time	nQn, nD to nCP; see Figure 7	5 V			45	15	-	ns
			10 V			30	10	-	ns
			15 V			25	10	-	ns
t_W	pulse width	nQn, nD to nCP; see Figure 7	5 V			-	95	190	ns
			10 V			-	40	80	ns
			15 V			-	30	60	ns
f_{max}	maximum frequency	see Figure 7	5 V			2	5	-	MHz
			10 V			6	12	-	MHz
			15 V			8	16	-	MHz

[1] The typical values of the propagation delay and transition times are calculated from the extrapolation formulas shown (C_L in pF).

Table 8. Dynamic power dissipation P_D

P_D can be calculated from the formulas shown. V_{SS} = 0 V; $t_r = t_f \leq 20$ ns; T_{amb} = 25 °C.

Symbol	Parameter	V_{DD}	Typical formula for P_D (μW)	where:
P_D	dynamic power dissipation	5 V	$P_D = 7000 \times f_i + \Sigma(f_o \times C_L) \times V_{DD}^2$	f_i = input frequency in MHz,
		10 V	$P_D = 28000 \times f_i + \Sigma(f_o \times C_L) \times V_{DD}^2$	f_o = output frequency in MHz,
		15 V	$P_D = 70000 \times f_i + \Sigma(f_o \times C_L) \times V_{DD}^2$	C_L = output load capacitance in pF,
				V_{DD} = supply voltage in V,
				$\Sigma(f_o \times C_L)$ = sum of the outputs.

12. Waveforms

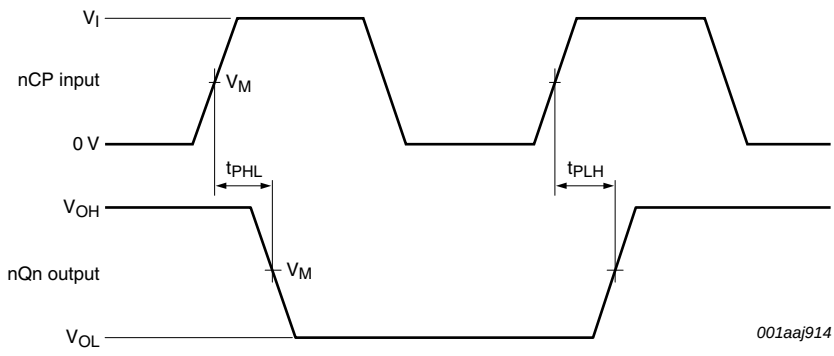

Measurement points are given in Table 9

The logic levels V_{OH} and V_{OL} are typical voltage output levels that occur with the output load.

Fig 4. Propagation delays for nCP to nQn

Table 9. Measurement points

Input	Output		
V_M	V_M	V_X	V_Y
$0.5V_I$	$0.5V_{DD}$	$0.1V_{DD}$	$0.9V_{DD}$

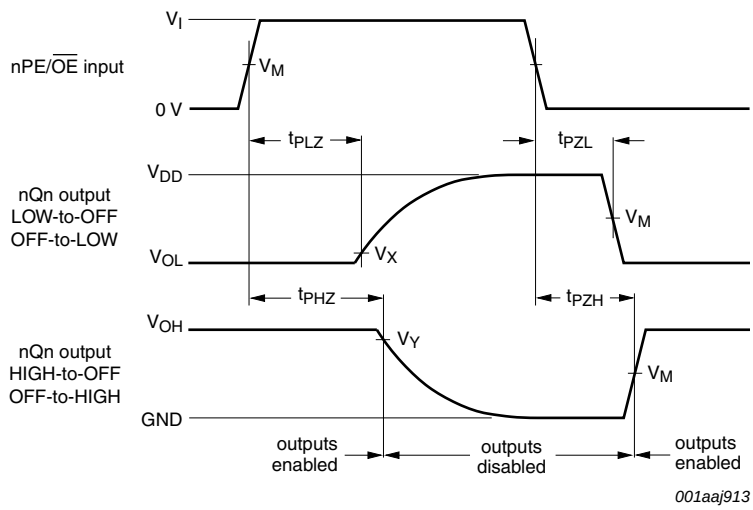

Measurement points are given in Table 9

The logic levels V_{OH} and V_{OL} are typical voltage output levels that occur with the output load.

Fig 5. Enable and disable times and 3-state propagation delays

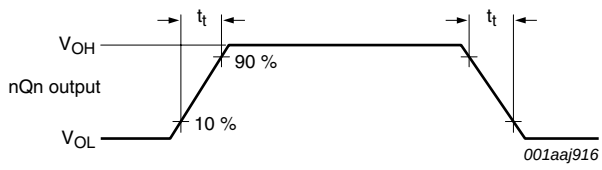

The logic levels V_{OH} and V_{OL} are typical voltage output levels that occur with the output load.

Fig 6. Transition times for nQn

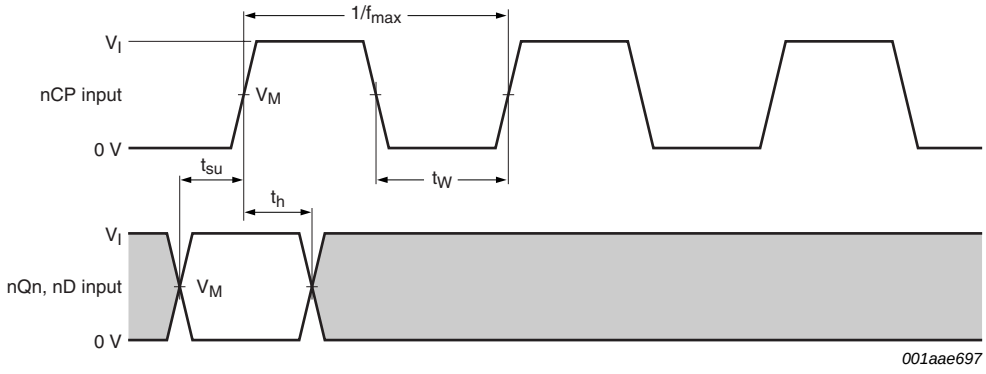

The shading indicates where the data (nQn and nD) is permitted to change for predictable output changes.

Measurement points are given in Table 9

The logic levels V_{OH} and V_{OL} are typical voltage output levels that occur with the output load.

Fig 7. Waveforms showing minimum clock pulse width and maximum frequency and set-up and hold times for nQn (as data input) or nD to nCP

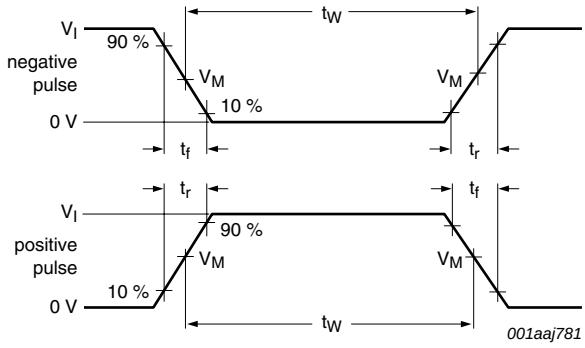

a. Input waveforms

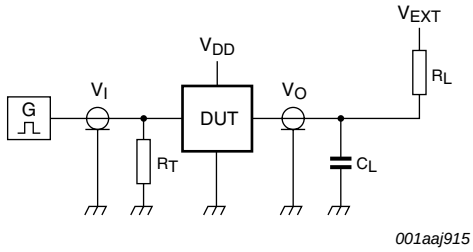

b. Test circuit

Test data is given in Table 10.

Definitions for test circuit:

R_L = Load resistance;

C_L = Load capacitance including jig and probe capacitance;

R_T = Termination resistance should be equal to output impedance Z_o of the pulse generator.

Fig 8. Test circuit for switching times

Table 10. Test data

Supply voltage	Input		Load		V_{EXT}		
	V_I	t_r, t_f	C_L	R_L	t_{PLH}, t_{PHL}	t_{PLZ}, t_{PZL}	t_{PHZ}, t_{PZH}
5 V to 15 V	V_{DD}	≤ 20 ns	50 pF	1 kΩ	open	$2V_{DD}$	GND

13. Package outline

DIP16: plastic dual in-line package; 16 leads (300 mil) **SOT38-4**

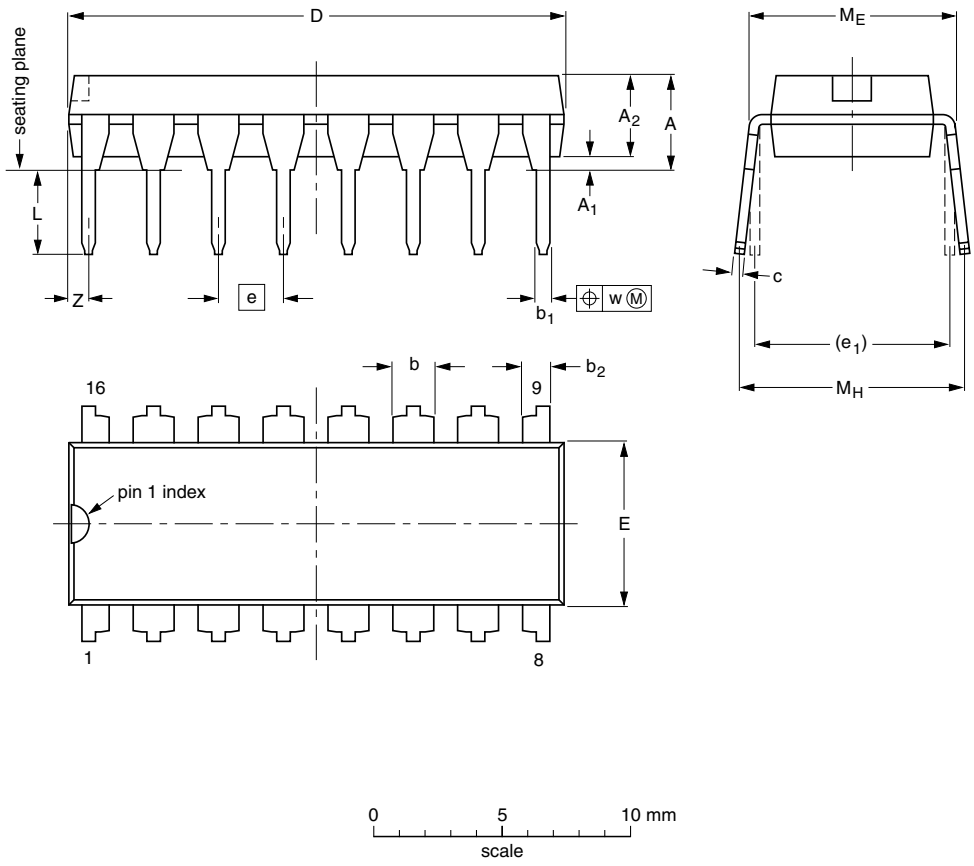

DIMENSIONS (inch dimensions are derived from the original mm dimensions)

UNIT	A max.	A_1 min.	A_2 max.	b	b_1	b_2	c	D (1)	E (1)	e	e_1	L	M_E	M_H	w	Z (1) max.
mm	4.2	0.51	3.2	1.73 1.30	0.53 0.38	1.25 0.85	0.36 0.23	19.50 18.55	6.48 6.20	2.54	7.62	3.60 3.05	8.25 7.80	10.0 8.3	0.254	0.76
inches	0.17	0.02	0.13	0.068 0.051	0.021 0.015	0.049 0.033	0.014 0.009	0.77 0.73	0.26 0.24	0.1	0.3	0.14 0.12	0.32 0.31	0.39 0.33	0.01	0.03

Note

1. Plastic or metal protrusions of 0.25 mm (0.01 inch) maximum per side are not included.

OUTLINE VERSION	REFERENCES				EUROPEAN PROJECTION	ISSUE DATE
	IEC	JEDEC	JEITA			
SOT38-4						~~95-01-14~~ 03-02-13

Fig 9. Package outline SOT38-4 (DIP16)

SO16: plastic small outline package; 16 leads; body width 7.5 mm **SOT162-1**

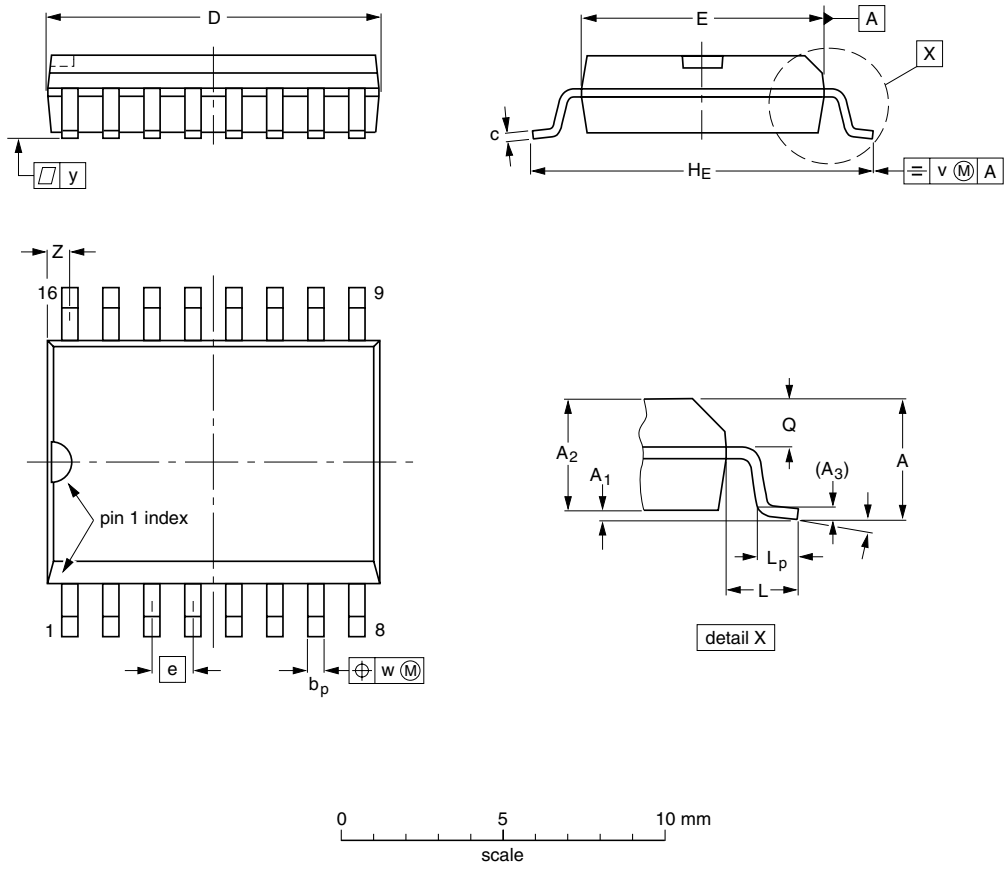

DIMENSIONS (inch dimensions are derived from the original mm dimensions)

UNIT	A max.	A_1	A_2	A_3	b_p	c	D (1)	E (1)	e	H_E	L	L_p	Q	v	w	y	Z (1)	
mm	2.65	0.3 0.1	2.45 2.25	0.25	0.49 0.36	0.32 0.23	10.5 10.1	7.6 7.4	1.27	10.65 10.00	1.4	1.1 0.4	1.1 1.0	0.25	0.25	0.1	0.9 0.4	8° 0°
inches	0.1	0.012 0.004	0.096 0.089	0.01	0.019 0.014	0.013 0.009	0.41 0.40	0.30 0.29	0.05	0.419 0.394	0.055	0.043 0.016	0.043 0.039	0.01	0.01	0.004	0.035 0.016	

Note

1. Plastic or metal protrusions of 0.15 mm (0.006 inch) maximum per side are not included.

OUTLINE VERSION	REFERENCES				EUROPEAN PROJECTION	ISSUE DATE
	IEC	JEDEC	JEITA			
SOT162-1	075E03	MS-013				~~99-12-27~~ 03-02-19

Fig 10. Package outline SOT162-1 (SO16)

14. Revision history

Table 11. Revision history

Document ID	Release date	Data sheet status	Change notice	Supersedes
HEF4517B_6	20091210	Product data sheet	-	HEF4517B_5
Modifications:	• Section 9 “Recommended operating conditions” $\Delta t/\Delta V$ values updated.			
HEF4517B_5	20090728	Product data sheet	-	HEF4517B_4
HEF4517B_4	20090406	Product data sheet	-	HEF4517B_CNV_3
HEF4517B_CNV_3	19950101	Product specification	-	HEF4517B_CNV_2
HEF4517B_CNV_2	19950101	Product specification	-	-

15. Legal information

15.1 Data sheet status

Document status[1][2]	Product status[3]	Definition
Objective [short] data sheet	Development	This document contains data from the objective specification for product development.
Preliminary [short] data sheet	Qualification	This document contains data from the preliminary specification.
Product [short] data sheet	Production	This document contains the product specification.

[1] Please consult the most recently issued document before initiating or completing a design.

[2] The term 'short data sheet' is explained in section "Definitions".

[3] The product status of device(s) described in this document may have changed since this document was published and may differ in case of multiple devices. The latest product status information is available on the Internet at URL http://www.nxp.com.

15.2 Definitions

Draft — The document is a draft version only. The content is still under internal review and subject to formal approval, which may result in modifications or additions. NXP Semiconductors does not give any representations or warranties as to the accuracy or completeness of information included herein and shall have no liability for the consequences of use of such information.

Short data sheet — A short data sheet is an extract from a full data sheet with the same product type number(s) and title. A short data sheet is intended for quick reference only and should not be relied upon to contain detailed and full information. For detailed and full information see the relevant full data sheet, which is available on request via the local NXP Semiconductors sales office. In case of any inconsistency or conflict with the short data sheet, the full data sheet shall prevail.

15.3 Disclaimers

General — Information in this document is believed to be accurate and reliable. However, NXP Semiconductors does not give any representations or warranties, expressed or implied, as to the accuracy or completeness of such information and shall have no liability for the consequences of use of such information.

Right to make changes — NXP Semiconductors reserves the right to make changes to information published in this document, including without limitation specifications and product descriptions, at any time and without notice. This document supersedes and replaces all information supplied prior to the publication hereof.

Suitability for use — NXP Semiconductors products are not designed, authorized or warranted to be suitable for use in medical, military, aircraft, space or life support equipment, nor in applications where failure or malfunction of an NXP Semiconductors product can reasonably be expected to result in personal injury, death or severe property or environmental damage. NXP Semiconductors accepts no liability for inclusion and/or use of NXP Semiconductors products in such equipment or applications and therefore such inclusion and/or use is at the customer's own risk.

Applications — Applications that are described herein for any of these products are for illustrative purposes only. NXP Semiconductors makes no representation or warranty that such applications will be suitable for the specified use without further testing or modification.

Limiting values — Stress above one or more limiting values (as defined in the Absolute Maximum Ratings System of IEC 60134) may cause permanent damage to the device. Limiting values are stress ratings only and operation of the device at these or any other conditions above those given in the Characteristics sections of this document is not implied. Exposure to limiting values for extended periods may affect device reliability.

Terms and conditions of sale — NXP Semiconductors products are sold subject to the general terms and conditions of commercial sale, as published at http://www.nxp.com/profile/terms, including those pertaining to warranty, intellectual property rights infringement and limitation of liability, unless explicitly otherwise agreed to in writing by NXP Semiconductors. In case of any inconsistency or conflict between information in this document and such terms and conditions, the latter will prevail.

No offer to sell or license — Nothing in this document may be interpreted or construed as an offer to sell products that is open for acceptance or the grant, conveyance or implication of any license under any copyrights, patents or other industrial or intellectual property rights.

Export control — This document as well as the item(s) described herein may be subject to export control regulations. Export might require a prior authorization from national authorities.

15.4 Trademarks

Notice: All referenced brands, product names, service names and trademarks are the property of their respective owners.

16. Contact information

For more information, please visit: **http://www.nxp.com**

For sales office addresses, please send an email to: **salesaddresses@nxp.com**

17. Contents

For more information, please visit: http://www.nxp.com
For sales office addresses, please send an email to: salesaddresses@nxp.com

Date of release: 10 December 2009
Document identifier: HEF4517B_6