19-4334; Rev. 8; 3/10

# Low-Cost, µP Supervisory Circuits



## General Description

The MAX705-MAX708/MAX813L microprocessor (µP) supervisory circuits reduce the complexity and number of components required to monitor power-supply and battery functions in µP systems. These devices significantly improve system reliability and accuracy compared to separate ICs or discrete components.

The MAX705/MAX706/MAX813L provide four functions:

1) A reset output during power-up, power-down, and brownout conditions.
2) An independent watchdog output that goes low if the watchdog input has not been toggled within 1.6 seconds.
3) A 1.25V threshold detector for power-fail warning, low-battery detection, or for monitoring a power supply other than +5V.
4) An active-low manual-reset input.

The MAX707/MAX708 are the same as the MAX705/MAX706, except an active-high reset is substituted for the watchdog timer. The MAX813L is the same as the MAX705, except RESET is provided instead of $\overline{\text{RESET}}$.

Two supply-voltage monitor levels are available: The MAX705/MAX707/MAX813L generate a reset pulse when the supply voltage drops below 4.65V, while the MAX706/MAX708 generate a reset pulse below 4.40V. All four parts are available in 8-pin DIP, SO and µMAX® packages.

## Applications

Computers
Controllers
Intelligent Instruments
Automotive Systems
Critical µP Power Monitoring

*µMAX is a registered trademark of Maxim Integrated Products, Inc.*

## Typical Operating Circuit

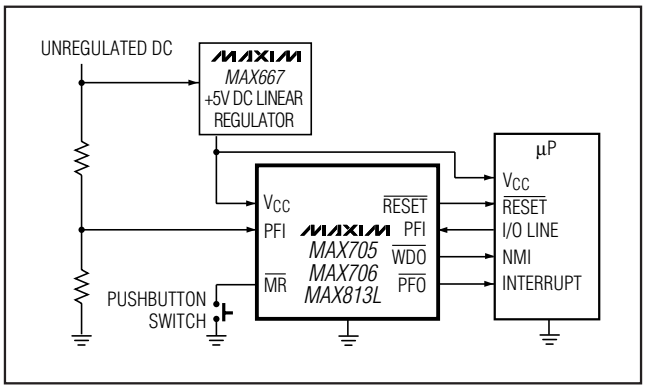


## Features

- **Available in Tiny µMAX Package**
- **Guaranteed RESET Valid at $V_{CC}$ = 1V**
- **Precision Supply-Voltage Monitor**
  **4.65V in MAX705/MAX707/MAX813L**
  **4.40V in MAX706/MAX708**
- **200ms Reset Pulse Width**
- **Debounced TTL/CMOS-Compatible Manual-Reset Input**
- **Independent Watchdog Timer—1.6s Timeout (MAX705/MAX706)**
- **Active-High Reset Output (MAX707/MAX708/MAX813L)**
- **Voltage Monitor for Power-Fail or Low-Battery Warning**

## Ordering Information

| PART | TEMP RANGE | PIN-PACKAGE |
|---|---|---|
| **MAX705**CPA | 0°C to +70°C | 8 Plastic DIP |
| MAX705CSA | 0°C to +70°C | 8 SO |
| MAX705CUA | 0°C to +70°C | 8 µMAX |
| MAX705C/D | 0°C to +70°C | Dice* |

***Ordering Information continued at end of data sheet.***

** Dice are specified at $T_A$ = +25°C.*

*** Contact factory for availability and processing to MIL-STD-883. Devices in PDIP, SO and µMAX packages are available in both leaded and lead-free packaging. Specify lead free by adding the + symbol at the end of the part number when ordering. Lead-free not available for CERDIP package.*

## Pin Configurations

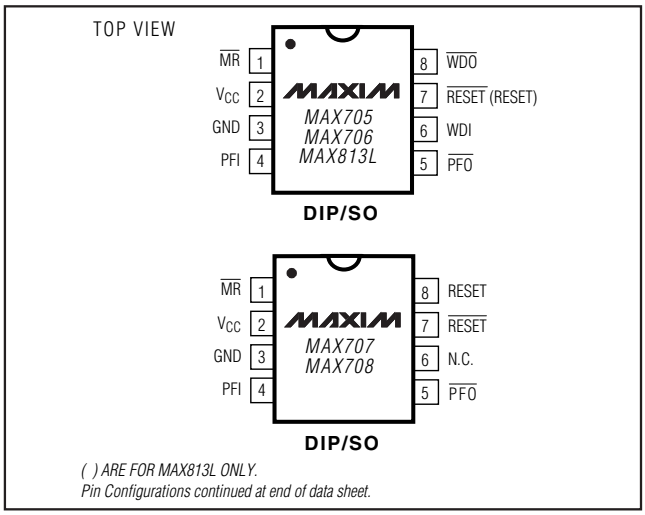


*( ) ARE FOR MAX813L ONLY.*

*Pin Configurations continued at end of data sheet.*



***For pricing, delivery, and ordering information, please contact Maxim Direct at 1-888-629-4642, or visit Maxim's website at www.maxim-ic.com.***

Downloaded from Elcodis.com electronic components distributor

## ABSOLUTE MAXIMUM RATINGS

Terminal Voltage (with respect to GND)
- $V_{CC}$ ..... -0.3V to 6.0V
- All Other Inputs (Note 1) ..... -0.3V to ($V_{CC}$ + 0.3V)

Input Current
- $V_{CC}$ ..... 20mA
- GND ..... 20mA

Output Current (all outputs) ..... 20mA

Continuous Power Dissipation ($T_A$ = +70°C)
- Plastic DIP (derate 9.09mW/°C above +70°C) ..... 727mW
- SO (derate 5.88mW/°C above +70°C) ..... 471mW
- µMAX (derate 4.10mW/°C above +70°C) ..... 330mW
- CERDIP (derate 8.00mW/°C above +70°C) ..... 640mW

Operating Temperature Ranges
- MAX70_C__, MAX813LC__ ..... 0°C to +70°C
- MAX70_E__, MAX813LE__ ..... -40°C to +85°C
- MAX70_MJA ..... -55°C to +125°C

Storage Temperature Range ..... -65°C to +160°C

Lead Temperature (soldering, 10s) ..... +300°C

Soldering Temperature (reflow)
- Lead(Pb)-free.....+260°C
- Containing Lead(Pb).....+240°C

**Note 1:** The input voltage limits on PFI and $\overline{MR}$ can be exceeded if the input current is less than 10mA.

*Stresses beyond those listed under "Absolute Maximum Ratings" may cause permanent damage to the device. These are stress ratings only, and functional operation of the device at these or any other conditions beyond those indicated in the operational sections of the specifications is not implied. Exposure to absolute maximum rating conditions for extended periods may affect device reliability.*

## ELECTRICAL CHARACTERISTICS

($V_{CC}$ = 4.75V to 5.5V for MAX705/MAX707/MAX813L, $V_{CC}$ = 4.5V to 5.5V for MAX706/MAX708, $T_A$ = $T_{MIN}$ to $T_{MAX}$, unless otherwise noted.)

| PARAMETER | SYMBOL | CONDITIONS | MIN | TYP | MAX | UNITS |
|---|---|---|---|---|---|---|
| Operating Voltage Range | $V_{CC}$ | MAX70_C | 1.0 | | 5.5 | V |
| | | MAX813LC | 1.1 | | 5.5 | |
| | | MAX70_E/M, MAX813LE/M | 1.2 | | 5.5 | |
| Supply Current | $I_{SUPPLY}$ | MAX705C, MAX706C, MAX813LC | | 150 | 350 | µA |
| | | MAX705E/M, MAX706E/M, MAX813LE/M | | 150 | 500 | |
| | | MAX707C, MAX708C | | 50 | 350 | |
| | | MAX707E/M, MAX708E/M | | 50 | 500 | |
| Reset Threshold (Note 2) | $V_{RT}$ | MAX705, MAX707, MAX813L | 4.50 | 4.65 | 4.75 | V |
| | | MAX706, MAX708 | 4.25 | 4.40 | 4.50 | |
| Reset Threshold Hysteresis (Note 2) | | | | 40 | | mV |
| Reset Pulse Width (Note 2) | $t_{RS}$ | | 140 | 200 | 280 | ms |
| $\overline{RESET}$ Output Voltage | | $I_{SOURCE}$ = 800µA | $V_{CC}$ - 1.5 | | | V |
| | | $I_{SINK}$ = 3.2mA | | | 0.4 | |
| | | MAX70_C, $V_{CC}$ = 1V, $I_{SINK}$ = 50µA | | | 0.3 | |
| | | MAX70_E/M, $V_{CC}$ = 1.2V, $I_{SINK}$ = 100µA | | | 0.3 | |
| RESET Output Voltage | | MAX707, MAX708, $I_{SOURCE}$ = 800µA | $V_{CC}$ - 1.5 | | | V |
| | | MAX707, MAX708, $I_{SINK}$ = 1.2mA | | | 0.4 | |
| | | MAX813LC, $I_{SOURCE}$ = 4µA, $V_{CC}$ = 1.1V | 0.8 | | | |
| | | MAX813LE/M, $I_{SOURCE}$ = 4µA, $V_{CC}$ = 1.2V | 0.9 | | | |
| | | MAX813L, $I_{SOURCE}$ = 800µA | $V_{CC}$ - 1.5 | | | |
| | | MAX813L, $I_{SINK}$ = 3.2mA | | | 0.4 | |
| Watchdog Timeout Period | $t_{WD}$ | MAX705, MAX706, MAX813L | 1.00 | 1.60 | 2.25 | s |
| WDI Pulse Width | $t_{WP}$ | $V_{IL}$ = 0.4V, $V_{IH}$ = ($V_{CC}$) (0.8) | 50 | | | ns |
| WDI Input Threshold — Low | | MAX705, MAX706, MAX813L, $V_{CC}$ = 5V | | | 0.8 | V |
| WDI Input Threshold — High | | | 3.5 | | | |
| WDI Input Current | | MAX705, MAX706, MAX813L, WDI = $V_{CC}$ | | 50 | 150 | µA |
| | | MAX705, MAX706, MAX813L, WDI = 0V | -150 | -50 | | |
| $\overline{WDO}$ Output Voltage | | MAX705, MAX706, MAX813L, $I_{SOURCE}$ = 800µA | $V_{CC}$ - 1.5 | | | V |
| | | MAX705, MAX706, MAX813L, $I_{SINK}$ = 1.2mA | | | 0.4 | |



Downloaded from Elcodis.com electronic components distributor

## ELECTRICAL CHARACTERISTICS (continued)

($V_{CC}$ = 4.75V to 5.5V for MAX705/MAX707/MAX813L, $V_{CC}$ = 4.5V to 5.5V for MAX706/MAX708, $T_A$ = $T_{MIN}$ to $T_{MAX}$, unless otherwise noted.)

| PARAMETER | | SYMBOL | CONDITIONS | MIN | TYP | MAX | UNITS |
|---|---|---|---|---|---|---|---|
| $\overline{MR}$ Pull-Up Current | | | $\overline{MR}$ = 0V | 100 | 250 | 600 | µA |
| $\overline{MR}$ Pulse Width | | $t_{MR}$ | | 150 | | | ns |
| $\overline{MR}$ Input Threshold | Low | | | | | 0.8 | V |
| | High | | | 2.0 | | | |
| $\overline{MR}$ to Reset Out Delay (Note 2) | | $t_{MD}$ | | | | 250 | ns |
| PFI Input Threshold | | | $V_{CC}$ = 5V | 1.20 | 1.25 | 1.30 | V |
| PFI Input Current | | | | -25.00 | +0.01 | +25.00 | nA |
| $\overline{PFO}$ Output Voltage | | | $I_{SOURCE}$ = 800µA | $V_{CC}$ - 1.5 | | | V |
| | | | $I_{SINK}$ = 3.2mA | | | 0.4 | |

**Note 2:** Applies to both $\overline{RESET}$ in the MAX705–MAX708 and RESET in the MAX707/MAX708/MAX813L.



Downloaded from Elcodis.com electronic components distributor

# Low-Cost, µP Supervisory Circuits

## Typical Operating Characteristics

**MAX705/MAX707**
**RESET OUTPUT VOLTAGE**
**vs. SUPPLY VOLTAGE**

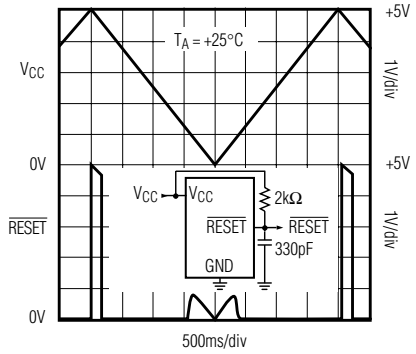


**MAX705/MAX707**
**RESET RESPONSE TIME**

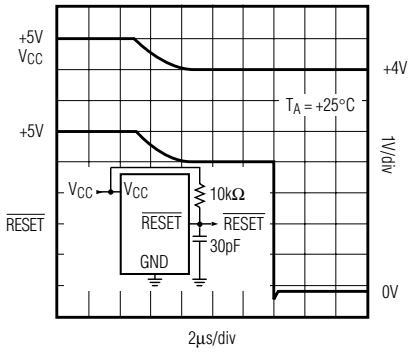


**POWER-FAIL COMPARATOR**
**DE-ASSERTION RESPONSE TIME**

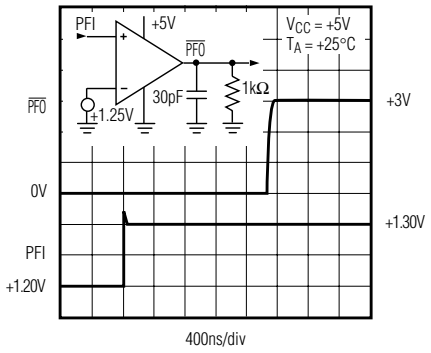


**POWER-FAIL COMPARATOR**
**ASSERTION RESPONSE TIME**

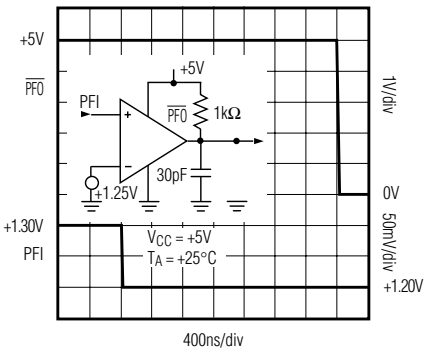


**MAX707**
**RESET, RESET ASSERTION**

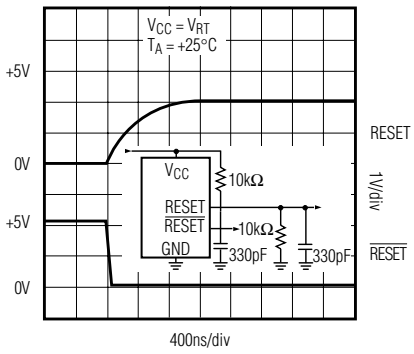


**MAX707**
**RESET, RESET DE-ASSERTION**

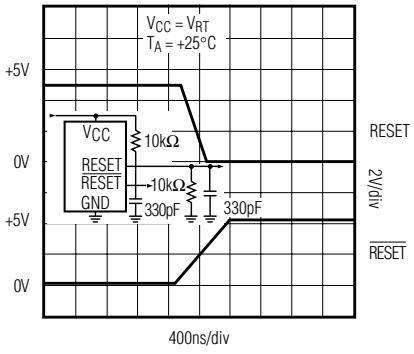


**MAX707/MAX708/MAX813L**
**RESET OUTPUT VOLTAGE**
**vs. SUPPLY VOLTAGE**

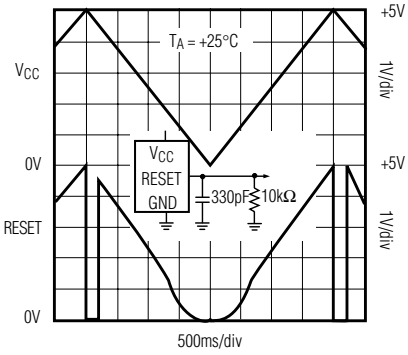


**MAX813L**
**RESET RESPONSE TIME**

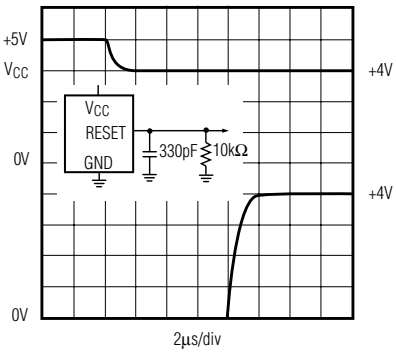




Downloaded from Elcodis.com electronic components distributor

## Pin Description

| PIN | | | | | | NAME | FUNCTION |
|---|---|---|---|---|---|---|---|
| MAX705/MAX706 | | MAX707/MAX708 | | MAX813L | | | |
| DIP/SO | µMAX | DIP/SO | µMAX | DIP/SO | µMAX | | |
| 1 | 3 | 1 | 3 | 1 | 3 | $\overline{MR}$ | Manual-Reset Input triggers a reset pulse when pulled below 0.8V. This active-low input has an internal 250µA pull-up current. It can be driven from a TTL or CMOS logic line as well as shorted to ground with a switch. |
| 2 | 4 | 2 | 4 | 2 | 4 | $V_{CC}$ | +5V Supply Input |
| 3 | 5 | 3 | 5 | 3 | 5 | GND | 0V Ground Reference for all signals |
| 4 | 6 | 4 | 6 | 4 | 6 | PFI | Power-Fail Voltage Monitor Input. When PFI is less than 1.25V, $\overline{PFO}$ goes low. Connect PFI to GND or $V_{CC}$ when not used. |
| 5 | 7 | 5 | 7 | 5 | 7 | $\overline{PFO}$ | Power-Fail Output goes low and sinks current when PFI is less than 1.25V; otherwise $\overline{PFO}$ stays high. |
| 6 | 8 | — | — | 6 | 8 | WDI | Watchdog Input. If WDI remains high or low for 1.6sec, the internal watchdog timer runs out and WDO goes low (Figure 1). Floating WDI or connecting WDI to a high-impedance three-state buffer disables the watchdog feature. The internal watchdog timer clears whenever reset is asserted, WDI is three-stated, or WDI sees a rising or falling edge. |
| — | — | 6 | — | — | — | N.C. | No Connect |
| 7 | 1 | 7 | 1 | — | — | $\overline{RESET}$ | Active-Low Reset Output pulses low for 200ms when triggered, and stays low whenever $V_{CC}$ is below the reset threshold (4.65V in the MAX705 and 4.40V in the MAX706). It remains low for 200ms after $V_{CC}$ rises above the reset threshold or $\overline{MR}$ goes from low to high (Figure 3). A watchdog timeout will not trigger $\overline{RESET}$ unless $\overline{WDO}$ is connected to $\overline{MR}$. |
| 8 | 2 | — | — | 8 | 2 | $\overline{WDO}$ | Watchdog Output pulls low when the internal watchdog timer finishes its 1.6sec count and does not go high again until the watchdog is cleared. $\overline{WDO}$ also goes low during low-line conditions. Whenever $V_{CC}$ is below the reset threshold, $\overline{WDO}$ stays low; however, unlike $\overline{RESET}$, $\overline{WDO}$ does not have a minimum pulse width. As soon as $V_{CC}$ rises above the reset threshold, $\overline{WDO}$ goes high with no delay. |
| — | — | 8 | 2 | 7 | 1 | RESET | Active-High Reset Output is the inverse of $\overline{RESET}$. Whenever RESET is high, $\overline{RESET}$ is low, and vice versa (Figure 2). The MAX813L has a RESET output only. |



Downloaded from Elcodis.com electronic components distributor

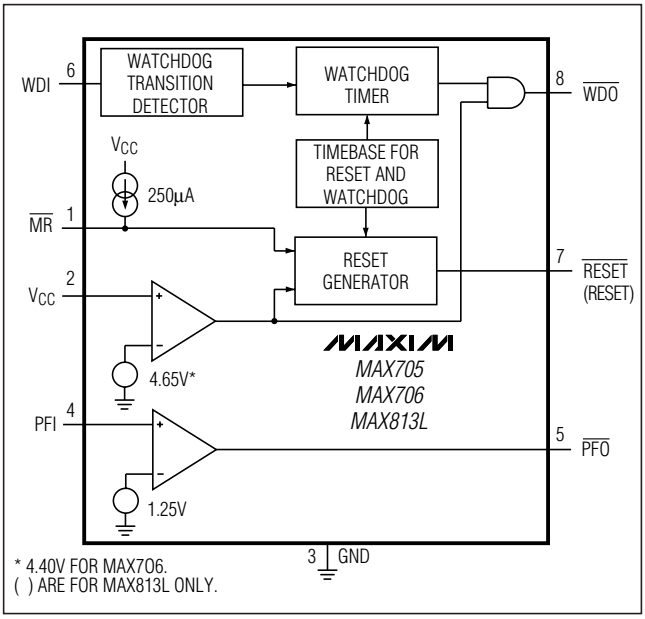


Figure 1. MAX705/MAX706/MAX813L Block Diagram

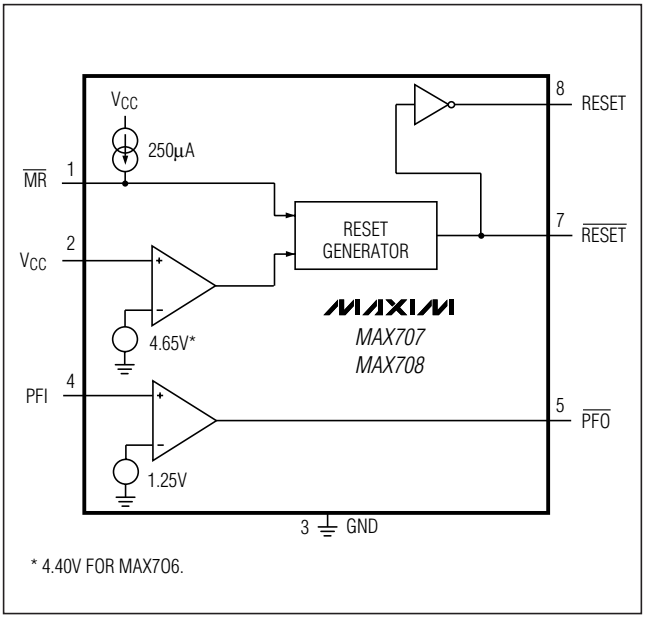


Figure 2. MAX707/MAX708 Block Diagram

## Detailed Description

### Reset Output

A microprocessor's (µP's) reset input starts the µP in a known state. Whenever the µP is in an unknown state, it should be held in reset. The MAX705-MAX708/MAX813L assert reset during power-up and prevent code execution errors during power-down or brownout conditions.

On power-up, once $V_{CC}$ reaches 1V, $\overline{RESET}$ is a guaranteed logic low of 0.4V or less. As $V_{CC}$ rises, $\overline{RESET}$ stays low. When $V_{CC}$ rises above the reset threshold, an internal timer releases $\overline{RESET}$ after about 200ms. $\overline{RESET}$ pulses low whenever $V_{CC}$ dips below the reset threshold, i.e. brownout condition. If brownout occurs in the middle of a previously initiated reset pulse, the pulse continues for at least another 140ms. On power-down, once $V_{CC}$ falls below the reset threshold, $\overline{RESET}$ stays low and is guaranteed to be 0.4V or less until $V_{CC}$ drops below 1V.

The MAX707/MAX708/MAX813L active-high RESET output is simply the complement of the $\overline{RESET}$ output, and is guaranteed to be valid with $V_{CC}$ down to 1.1V. Some µPs, such as Intel's 80C51, require an active-high reset pulse.

### Watchdog Timer

The MAX705/MAX706/MAX813L watchdog circuit monitors the µP's activity. If the µP does not toggle the watchdog input (WDI) within 1.6sec and WDI is not three-stated, $\overline{WDO}$ goes low. As long as $\overline{RESET}$ is asserted or the WDI input is three-stated, the watchdog timer will stay cleared and will not count. As soon as reset is released and WDI is driven high or low, the timer will start counting. Pulses as short as 50ns can be detected.

Typically, $\overline{WDO}$ will be connected to the non-maskable interrupt input (NMI) of a µP. When $V_{CC}$ drops below the reset threshold, $\overline{WDO}$ will go low whether or not the watchdog timer has timed out yet. Normally this would trigger an NMI interrupt, but $\overline{RESET}$ goes low simultaneously, and thus overrides the NMI interrupt.

If WDI is left unconnected, $\overline{WDO}$ can be used as a low-line output. Since floating WDI disables the internal timer, $\overline{WDO}$ goes low only when $V_{CC}$ falls below the reset threshold, thus functioning as a low-line output.

The MAX705/MAX706 have a watchdog timer and a $\overline{RESET}$ output. The MAX707/MAX708 have both active-high and active-low reset outputs. The MAX813L has both an active-high reset output and a watchdog timer.

### Manual Reset

The manual-reset input ($\overline{MR}$) allows reset to be triggered by a pushbutton switch. The switch is effectively debounced by the 140ms minimum reset pulse width. $\overline{MR}$ is TTL/CMOS logic compatible, so it can be driven by an external logic line. $\overline{MR}$ can be used to force a watchdog timeout to generate a reset pulse in the MAX705/MAX706/MAX813L. Simply connect $\overline{WDO}$ to $\overline{MR}$.



Downloaded from Elcodis.com electronic components distributor

### Power-Fail Comparator

The power-fail comparator can be used for various purposes because its output and noninverting input are not internally connected. The inverting input is internally connected to a 1.25V reference.

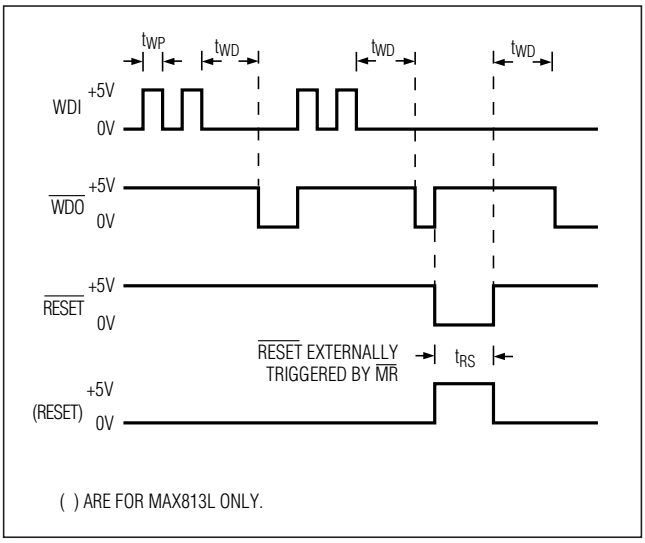


*Figure 3. MAX705/MAX706/MAX813L Watchdog Timing*

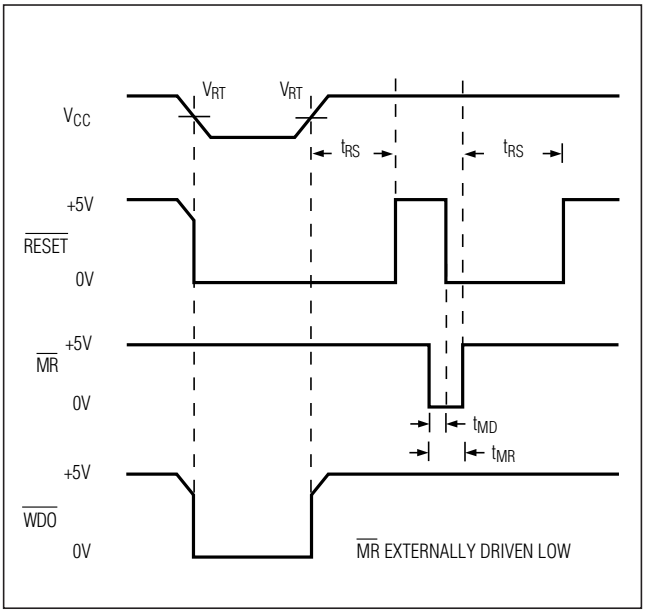


*Figure 4. MAX705/MAX706 RESET, MR, and WDO Timing with WDI Three-Stated. The MAX707/MAX708/MAX813L RESET output is the inverse of RESET shown.*

To build an early-warning circuit for power failure, connect the PFI pin to a voltage divider (see *Typical Operating Circuit*). Choose the voltage divider ratio so that the voltage at PFI falls below 1.25V just before the +5V regulator drops out. Use PFO to interrupt the µP so it can prepare for an orderly power-down.

## Applications Information

### Ensuring a Valid RESET Output Down to $V_{CC}$ = 0V

When $V_{CC}$ falls below 1V, the MAX705-MAX708 RESET output no longer sinks current—it becomes an open circuit. High-impedance CMOS logic inputs can drift to undetermined voltages if left undriven. If a pull-down resistor is added to the RESET pin as shown in Figure 5, any stray charge or leakage currents will be drained to ground, holding RESET low. Resistor value (R1) is not critical. It should be about 100kΩ, large enough not to load RESET and small enough to pull RESET to ground.

### Monitoring Voltages Other Than the Unregulated DC Input

Monitor voltages other than the unregulated DC by connecting a voltage divider to PFI and adjusting the ratio appropriately. If required, add hysteresis by connecting a resistor (with a value approximately 10 times the sum of the two resistors in the potential divider network) between PFI and PFO. A capacitor between PFI and GND will reduce the power-fail circuit's sensitivity to high-frequency noise on the line being monitored. RESET can be asserted on other voltages in addition to the +5V $V_{CC}$ line. Connect PFO to MR to initiate a RESET pulse when PFI drops below 1.25V. Figure 6 shows the MAX705-MAX708 configured to assert RESET when the +5V supply falls below the reset threshold, or when the +12V supply falls below approximately 11V.

### Monitoring a Negative Voltage

The power-fail comparator can also monitor a negative supply rail (Figure 7). When the negative rail is good (a negative voltage of large magnitude), PFO is low, and when the negative rail is degraded (a negative voltage of lesser magnitude), PFO is high. By adding the resistors and transistor as shown, a high PFO triggers reset. As long as PFO remains high, the MAX705-MAX708/MAX813L will keep reset asserted (RESET = low, RESET = high). Note that this circuit's accuracy depends on the PFI threshold tolerance, the $V_{CC}$ line, and the resistors.



Downloaded from Elcodis.com electronic components distributor

# Low-Cost, µP Supervisory Circuits

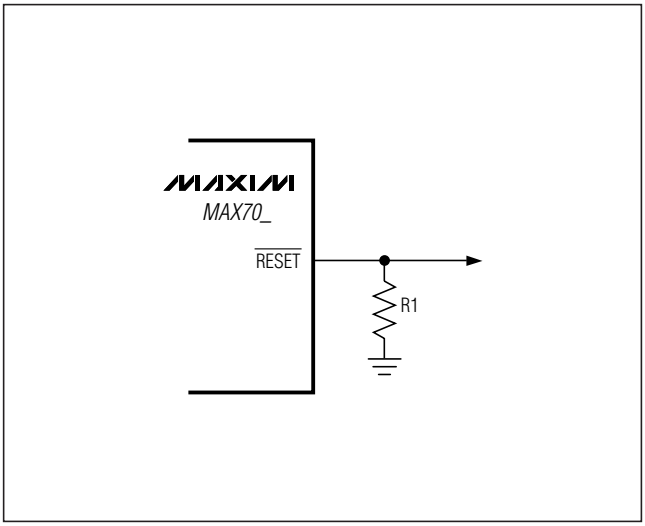


Figure 5. RESET Valid to Ground Circuit

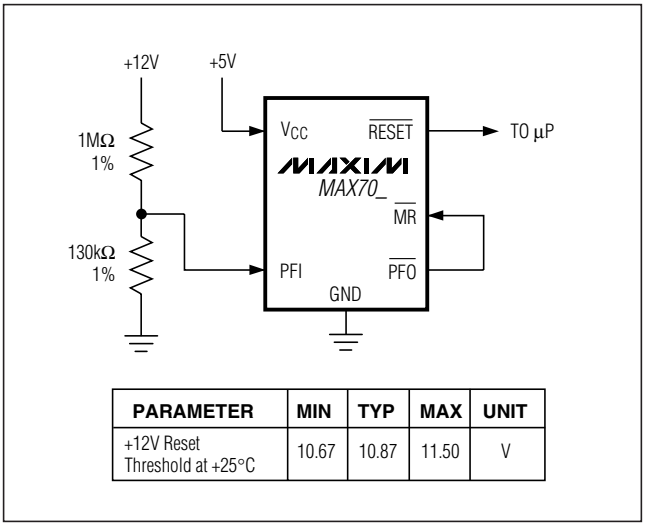


| PARAMETER | MIN | TYP | MAX | UNIT |
|---|---|---|---|---|
| +12V Reset Threshold at +25°C | 10.67 | 10.87 | 11.50 | V |

Figure 6. Monitoring Both +5V and +12V

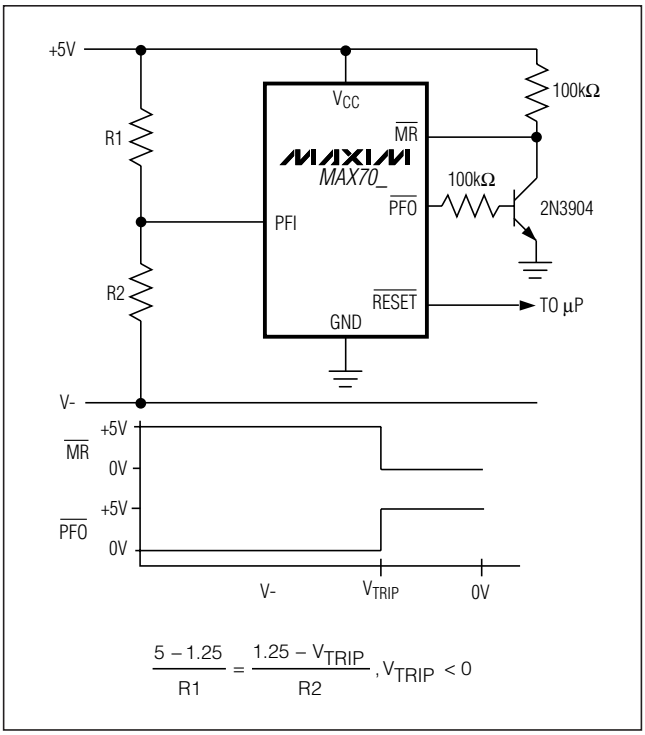


Figure 7. Monitoring a Negative Voltage

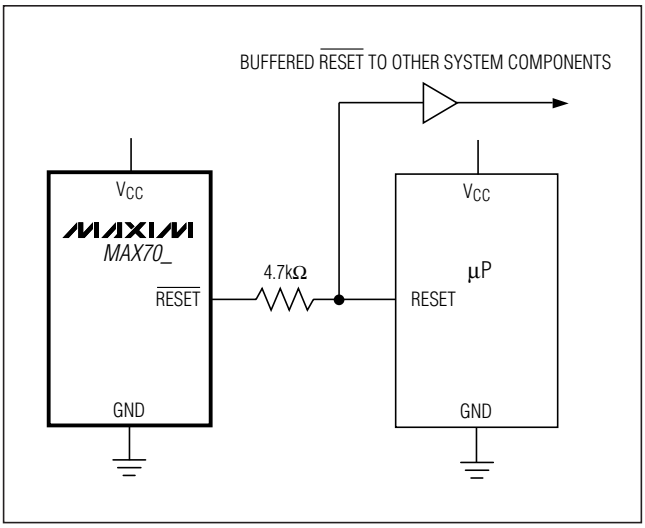


Figure 8. Interfacing to µPs with Bidirectional Reset I/O

### Interfacing to µPs with Bidirectional Reset Pins

µPs with bidirectional reset pins, such as the Motorola 68HC11 series, can contend with the MAX705-MAX708 RESET output. If, for example, the RESET output is driven high and the µP wants to pull it low, indeterminate logic levels may result. To correct this, connect a 4.7kΩ resistor between the RESET output and the µP reset I/O, as in Figure 8. Buffer the RESET output to other system components.



Downloaded from Elcodis.com electronic components distributor

## Ordering Information (continued)

| PART | TEMP RANGE | PIN-PACKAGE |
|---|---|---|
| MAX705EPA | -40°C to +85°C | 8 Plastic DIP |
| MAX705ESA | -40°C to +85°C | 8 SO |
| MAX705EUA | -40°C to +85°C | 8 µMAX |
| MAX705MJA | -55°C to +125°C | 8 CERDIP** |
| **MAX706**CPA | 0°C to +70°C | 8 Plastic DIP |
| MAX706CSA | 0°C to +70°C | 8 SO |
| MAX706CUA | 0°C to +70°C | 8 µMAX |
| MAX706C/D | 0°C to +70°C | Dice* |
| MAX706EPA | -40°C to +85°C | 8 Plastic DIP |
| MAX706ESA | -40°C to +85°C | 8 SO |
| MAX706EUA | -40°C to +85°C | 8 µMAX |
| MAX706MJA | -55°C to +125°C | 8 CERDIP** |
| **MAX707**CPA | 0°C to +70°C | 8 Plastic DIP |
| MAX707CSA | 0°C to +70°C | 8 SO |
| MAX707CUA | 0°C to +70°C | 8 µMAX |
| MAX707C/D | 0°C to +70°C | Dice* |
| MAX707EPA | -40°C to +85°C | 8 Plastic DIP |
| MAX707ESA | -40°C to +85°C | 8 SO |
| MAX707EUA | -40°C to +85°C | 8 µMAX |
| MAX707MJA | -55°C to +125°C | 8 CERDIP** |
| **MAX708**CPA | 0°C to +70°C | 8 Plastic DIP |
| MAX708CSA | 0°C to +70°C | 8 SO |
| MAX708CUA | 0°C to +70°C | 8 µMAX |
| MAX708C/D | 0°C to +70°C | Dice* |
| MAX708EPA | -40°C to +85°C | 8 Plastic DIP |
| MAX708ESA | -40°C to +85°C | 8 SO |
| MAX708EUA | -40°C to +85°C | 8 µMAX |
| MAX708MJA | -55°C to +125°C | 8 CERDIP** |
| **MAX813L**CPA | 0°C to +70°C | 8 Plastic DIP |
| MAX813LCSA | 0°C to +70°C | 8 SO |
| MAX813LCUA | 0°C to +70°C | 8 µMAX |
| MAX813LC/D | 0°C to +70°C | Dice* |
| MAX813LEPA | -40°C to +85°C | 8 Plastic DIP |
| MAX813LESA | -40°C to +85°C | 8 SO |
| MAX813LEUA | -40°C to +85°C | 8 µMAX |
| MAX813LMJA | -55°C to +125°C | 8 CERDIP** |

** Dice are specified at $T_A$ = +25°C.*
*** Contact factory for availability and processing to MIL-STD-883. Devices in PDIP, SO and µMAX packages are available in both leaded and lead-free packaging. Specify lead free by adding the + symbol at the end of the part number when ordering. Lead free not available for CERDIP package.*

## Pin Configurations (continued)

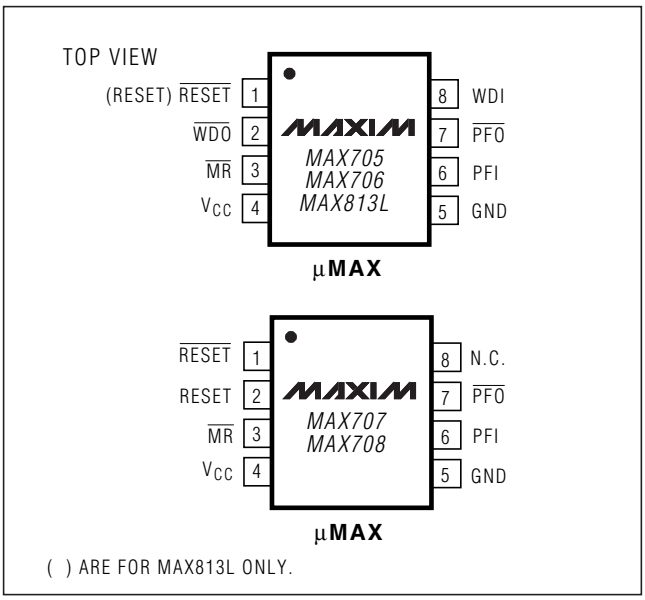


## Chip Topography

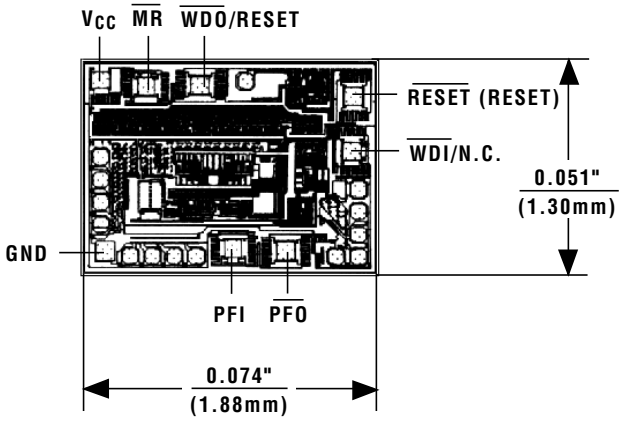


( ) ARE FOR MAX813L ONLY.
TRANSISTOR COUNT: 572
SUBSTRATE MUST BE LEFT UNCONNECTED.



Downloaded from Elcodis.com electronic components distributor

# Low-Cost, µP Supervisory Circuits

## µP Supervisory Circuits

| Part Number | Nominal Reset Threshold (V) | Minimum Reset Pulse Width (ms) | Active-Low Reset | Active-High Reset | RESET Valid to $V_{CC}$ = 1V | Nominal Watchdog Timeout Period (sec), if Available | Separate Watchdog Output | Backup-Battery Switch | $V_{CC}$-to-$V_{OUT}$ On Resistance Max (Ω) | $V_{BATT}$-to-$V_{OUT}$ On Resistance Max (Ω) | $\overline{CE}$ Write Protect | Power-Fail Comparator | Manual-Reset Input | Low-Line Output | Battery-On Output | $I_{SUPPLY}$ Operating Mode mA max (typ) | $I_{SUPPLY}$ Backup Mode µA max (typ) | Pins | Price† 1000-up ($) |
|---|---|---|---|---|---|---|---|---|---|---|---|---|---|---|---|---|---|---|---|
| MAX1232 | 4.37/4.62 | 250 | ✔ | ✔ | ✔ | 0.15/0.6/1.2 | | | | | | | ✔ | | | 0.2(0.05) | | 8 | 1.71 |
| MAX690A/692A | 4.65/4.40 | 140 | ✔ | | ✔ | 1.6 | | ✔ | 10 | 400 | | ✔ | | | | 0.35(0.2) | 5(0.05) | 8 | 3.26 |
| MAX690R/S/T | 2.63/2.93/3.08 | 140 | ✔ | | ✔ | 1.6 | | ✔ | 6 | 400 | | ✔ | | | | 0.5(0.4) | 1(0.4) | 8 | 3.23 |
| MAX691A/693A | 4.65/4.40 | 140/adj. | ✔ | ✔ | ✔ | 1.6/adj. | ✔ | ✔ | 1.2 | 25 | ✔/10ns | ✔ | | | ✔ | 0.1(0.035) | 5(0.04) | 16 | 3.61 |
| MAX1691 | The MAX1691 is a module with the MAX691A and a 125mAh lithium battery | | | | | | | | | | | | | | | | | 16 | †† |
| MAX696 | Adj. | 35/adj. | ✔ | ✔ | | 1.6/adj. | ✔ | ✔ | | | | ✔ | | | ✔ | | | 16 | 3.55 |
| MAX697 | Adj. | 35/adj. | ✔ | ✔ | | 1.6/adj. | ✔ | | | | ✔ | ✔ | | | | | | 16 | 3.58 |
| MAX700 | 4.65/adj. | 200 | ✔ | ✔ | | | | | | | | | ✔ | | | 0.2(0.1) | | 8 | 2.17 |
| MAX703/704 | 4.65/4.40 | 140 | ✔ | | ✔ | | | ✔ | 10 | 400 | | ✔ | ✔ | | | 0.35(0.2) | 5(0.05) | 8 | 1.38* |
| MAX704R/S/T | 2.63/2.93/3.08 | 140 | ✔ | | ✔ | | | ✔ | 6 | 400 | | ✔ | ✔ | | | 0.5(0.4) | 1(0.4) | 8 | 2.93 |
| MAX705/706 | 4.65/4.40 | 140 | ✔ | | ✔ | 1.6 | ✔ | | | | | ✔ | ✔ | | | 0.35(0.2) | | 8 | 1.02* |
| MAX706P | 2.63 | 140 | | ✔ | ✔ | 1.6 | ✔ | | | | | ✔ | ✔ | | | 0.35(0.2) | | 8 | 1.71 |
| MAX706R/S/T | 2.63/2.93/3.08 | 140 | ✔ | | ✔ | 1.6 | ✔ | | | | | ✔ | ✔ | | | 0.35(0.2) | | 8 | 1.71 |
| MAX707/708 | 4.65/4.40 | 140 | ✔ | ✔ | ✔ | | | | | | | ✔ | ✔ | | | 0.35(0.2) | | 8 | 0.88* |
| MAX708R/S/T | 2.63/2.93/3.08 | 140 | ✔ | ✔ | ✔ | | | | | | | ✔ | ✔ | | | 0.35(0.2) | | 8 | 1.63 |
| MAX791 | 4.65 | 140 | ✔ | ✔ | ✔ | 1 | ✔ | ✔ | 1.2 | 25 | ✔/10ns | ✔ | ✔ | ✔ | ✔ | 0.15(0.06) | 5(0.04) | 16 | 3.90 |
| MAX792L/M/R/S/T | 4.65/4.40/ 2.63/2.93/3.08 | 140 | ✔ | ✔ | ✔ | 1 | ✔ | | | | ✔/10ns | ✔ | ✔ | ✔ | | 0.15(0.07) | | 16 | 3.42 |
| MAX793R/S/U/T | 2.63/2.93/3.07/3.08 | 140 | ✔ | ✔ | ✔ | 1.6 | ✔ | ✔ | TBD | TBD | ✔ | ✔ | ✔ | ✔ | | TBD | TBD | 16 | †† |
| MAX794 | Adj. | 140 | ✔ | ✔ | ✔ | 1.6 | ✔ | ✔ | TBD | TBD | ✔ | ✔ | ✔ | ✔ | | TBD | TBD | 16 | †† |
| MAX795R/S/U/T | 2.63/2.93/3.07/3.08 | 140 | ✔ | | ✔ | | | ✔ | TBD | TBD | ✔ | | | ✔ | | TBD | TBD | 8 | †† |
| MAX800L/M | 4.60/4.40 | 140 | ✔ | ✔ | ✔ | 1.6/adj. | ✔ | ✔ | 1.2 | 25 | ✔/10ns | ✔/±2% | | | ✔ | 0.1(0.035) | 5(0.04) | 16 | 3.88 |
| MAX801L/N/M | 4.68/4.58/4.43 | 140 | ✔/±1.5% | | ✔ | 1.6 | | ✔ | TBD | TBD | | ✔ | | | | TBD | TBD | 8 | †† |
| MAX802L/M/R/S/T | 4.60/4.40/ 2.63/2.93/3.08 | 140 | ✔ | | ✔ | 1.6 | | ✔ | 10 | 400 | | ✔/±2% | | | | 0.35(0.2) | 5(0.05) | 8 | 3.59 |
| MAX804R/S/T | 2.63/2.93/3.08 | 140 | | ✔ | ✔ | 1.6 | | ✔ | 6 | 400 | | ✔/±2% | | | | 0.5(0.4) | 1(0.4) | 8 | 3.66 |
| MAX805L/M/R/S/T | 4.65/4.40/ 2.63/2.93/3.08 | 140 | | ✔ | ✔ | 1.6 | | ✔ | 10 | 400 | | ✔ | | | | 0.35(0.2) | 5(0.05) | 8 | 3.26 |
| MAX806R/S/T | 2.63/2.93/3.08 | 140 | ✔ | ✔ | ✔ | | | ✔ | 6 | 400 | | ✔/±2% | ✔ | | | 0.5(0.4) | 1(0.4) | 8 | 3.90 |
| MAX807L/N/M | 4.68/4.58/4.43 | 140 | ✔/±1.5% | ✔/±1.5% | ✔ | 1.6 | ✔ | ✔ | TBD | TBD | ✔ | ✔ | ✔ | ✔ | ✔ | TBD | TBD | 8 | †† |
| MAX808L/N/M | 4.68/4.58/4.43 | 140 | ✔/±1.5% | | ✔ | | | ✔ | TBD | TBD | ✔ | | | ✔ | | TBD | TBD | 16 | †† |
| MAX809L/M/R/S/T | 4.65/4.40/ 2.63/2.93/3.08 | 140 | ✔ | | ✔ | | | | | | | | | | | 0.06(0.024) | | 3 | †† |
| MAX810L/M/R/S/T | 4.65/4.40/ 2.63/2.93/3.08 | 140 | | ✔ | ✔ | | | | | | | | | | | 0.06(0.024) | | 3 | †† |
| MAX813L | 4.65 | 140 | | ✔ | ✔ | 1.6 | ✔ | | | | | ✔/±2% | ✔ | | | 0.35(0.2) | | 8 | 1.02* |
| MAX814K/L/N/T | 4.80/4.70/4.55/3.03 | 140 | ✔/±1% | ✔/±1% | ✔ | | | | | | | ✔/±2% | ✔ | ✔ | | TBD | TBD | 8 | †† |
| MAX815K/L/N/T | 4.80/4.70/4.55/3.03 | 140 | ✔/±1% | | ✔ | 1.6 | ✔ | | | | | ✔/±2% | ✔ | | | TBD | TBD | 8 | †† |
| MAX816 | Adj./±1% | 140 | ✔ | ✔ | ✔ | | | | | | | ✔/±2% | ✔ | | | TBD | TBD | 8 | †† |
| MAX820L/M/R/S/T | 4.65/4.40/ 2.63/2.93/3.08 | 140 | ✔ | ✔ | ✔ | 1 | ✔ | | | | ✔/10ns | ✔/±2% | ✔ | ✔ | | 0.15(0.07) | | 16 | 3.82 |
| MXD1210 | 4.37/4.62 | | | | | | | ✔ | 2.5 | 667 | ✔ | | | | | 0.5(0.23) | 0.1(0.002) | 8 | 2.44 |

† Prices provided are for design guidance and are FOB USA (unless otherwise noted). International prices will differ due to local duties, taxes, and exchange rates.
†† Future product—contact factory for pricing and availability. Specifications are preliminary.
* 25,000 pc. price, factory direct



Downloaded from Elcodis.com electronic components distributor

## Package Information

For the latest package outline information and land patterns, go to **www.maxim-ic.com/packages**. Note that a "+", "#", or "-" in the package code indicates RoHS status only. Package drawings may show a different suffix character, but the drawing pertains to the package regardless of RoHS status.

| PACKAGE TYPE | PACKAGE CODE | DOCUMENT NO. |
|---|---|---|
| 8 µMAX | U8-1 | **21-0036** |
| 8 Plastic DIP | P8-1 | **21-0043** |
| 8 SO | S8-1 | **21-0041** |



Downloaded from Elcodis.com electronic components distributor

# Low-Cost, µP Supervisory Circuits

## Revision History

| REVISION NUMBER | REVISION DATE | DESCRIPTION | PAGES CHANGED |
|---|---|---|---|
| 0 | 2/92 | Initial release | — |
| 8 | 3/10 | Updated the *Features*, *Absolute Maximum Ratings*, *Typical Operating Characteristics*, Figures 3, 7, 8, and the *Package Information* sections. | 1, 2, 4, 7, 8, 10 |

*Maxim cannot assume responsibility for use of any circuitry other than circuitry entirely embodied in a Maxim product. No circuit patent licenses are implied. Maxim reserves the right to change the circuitry and specifications without notice at any time.*



© 2010 Maxim Integrated Products Maxim is a registered trademark of Maxim Integrated Products, Inc.

Downloaded from Elcodis.com electronic components distributor