RG 160-28/56S

AC centrifugal compact fan

single inlet

ebm-papst St. Georgen GmbH & Co. KG
Hermann-Papst-Straße 1
78112 St. Georgen
Phone: +49 7724 81-0
Fax: +49 7724 81-1309
www.ebmpapst.com
info2@de.ebmpapst.com

Nominal data

Type	RG 160-28/56S	
Nominal voltage	[VAC]	230
Frequency	[Hz]	50
Speed	[min^{-1}]	2750
Power input	[W]	47.0
Min. ambient temperature	[°C]	-30
Max. ambient temperature	[°C]	70
Air flow	[m^3/h]	202
Sound power level	[B]	6.6

ml = max. load · me = max. efficiency · rfa = running at free air · cs = customer specs · cu = customer unit
Subject to alterations

Downloaded from Elcodis.com electronic components distributor

AC centrifugal compact fan

single inlet

Technical features

Dimensions	220 x 220 x 56 mm
General description	AC fan with external rotor shaded-pole motor.
Connection line	Single strands AWG18
Direction of protection	Left, looking at rotor
Direction of air flow	Centrifugal, air exhaust out of housing window
Bearing	Ball bearings
Lifetime L10 at 40 °C	30000 h
Lifetime L10 at maximum temperature	15000 h
Mass	1.700 kg
Housing material	Spiral housing of fiberglass-reinforced plastic, housing base of galvanized sheet steel.
Material of impeller	Fiberglass-reinforced plastic
Motor protection	Protected from overload by a thermal switch
Approval	VDE, CSA, UL, CE

ebm-papst St. Georgen GmbH & Co. KG · Hermann-Papst-Straße 1 · 78112 St. Georgen · Phone: +49 7724 81-0 · Fax: +49 7724 81-1309 · www.ebmpapst.com · info2@de.ebmpapst.com

Downloaded from Elcodis.com electronic components distributor

AC centrifugal compact fan

single inlet

Product drawing

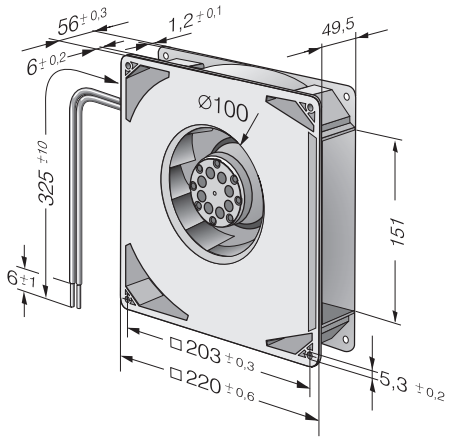

ebm-papst St. Georgen GmbH & Co. KG · Hermann-Papst-Straße 1 · 78112 St. Georgen · Phone: +49 7724 81-0 · Fax: +49 7724 81-1309 · www.ebmpapst.com · info2@de.ebmpapst.com

Downloaded from Elcodis.com electronic components distributor

AC centrifugal compact fan

single inlet

Charts: Air flow

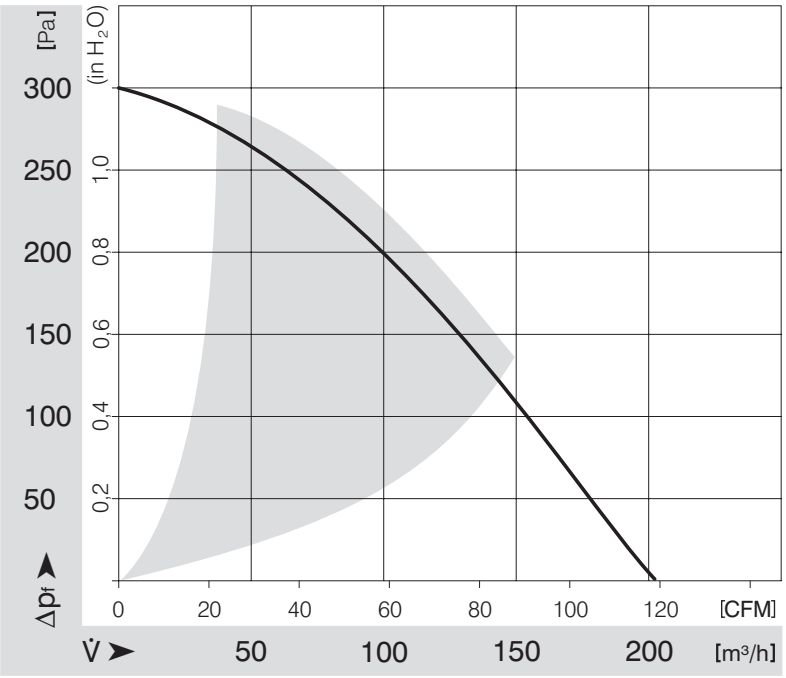

ebm-papst St. Georgen GmbH & Co. KG · Hermann-Papst-Straße 1 · 78112 St. Georgen · Phone: +49 7724 81-0 · Fax: +49 7724 81-1309 · www.ebmpapst.com · info2@de.ebmpapst.com

Downloaded from Elcodis.com electronic components distributor