# NMB-MAT

EMINEBEA.COM

# 5915PC(150x$^{\phi}$172x38$^{L}$)

## Metal Blades / Potting

## General Specifications

**Motor Protection:** Thermal Protect
**Motor Structure:** Capacitor-Run Induction Motor
**Insulation Resistance:** 100M Ω or over with a DC500V Megger
**Dielectric Withstand Voltage:** AC 1800V 3s
**Allowable Ambient Temperature Range:**
-10°C ~ +60°C (Operating)
-40°C ~ +70°C (Storage)
(non-condensing environment)

## Expected Life

**Failure Rate: 10%**
25°C 50,000 Hours

## Outline

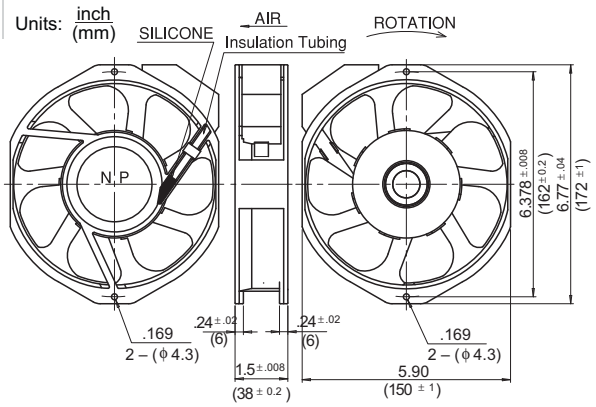


## Characteristic Curves

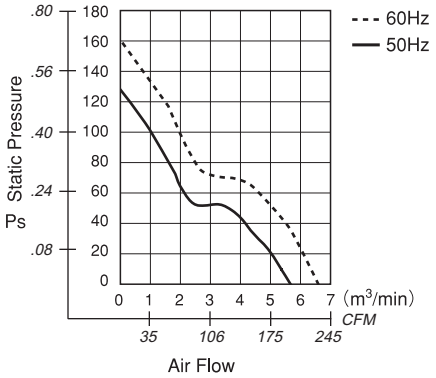


## Panel Cut-outs

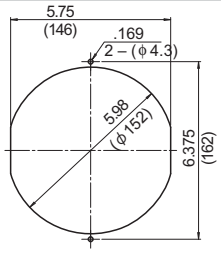


INLET SIDE / OUTLET SIDE

## Material

Casing : Aluminum
Impeller : Steel
Bearing : Ball Bearings
Terminal: Faston #110 or Equiv

## Specifications

| MODEL | Rated Voltage (V) | Frequency (Hz) | Starting Voltage (V) | Current (A)*1 | Input Power (W)+10/-20% | Speed (min$^{-1}$)*3 | Max. Air Flow (CFM)*3 | Max. Air Flow (m$^3$/min)*3 | Max. Static Pressure (in $H_2O$)*2 | Max. Static Pressure (Pa)*2 | Noise (dB)*2 | Mass (g) |
|---|---|---|---|---|---|---|---|---|---|---|---|---|
| 5915PC-10T-B30-SM0 | 100 | 50 | 65 | 0.53 | 42.0 | 2650 | 187.10 | 5.30 | .510 | 127.5 | 48.0 | 950 |
| | | 60 | | 0.45 | 40.0 | 3150 | 222.39 | 6.30 | .655 | 163.8 | 53.0 | |
| 5915PC-12T-B30-SM0 | 115 | 50 | 75 | 0.45 | 40.0 | 2650 | 187.10 | 5.30 | .510 | 127.5 | 48.0 | |
| | | 60 | | 0.40 | 38.0 | 3150 | 222.39 | 6.30 | .655 | 163.8 | 53.0 | |
| 5915PC-20T-B30-SM0 | 200 | 50 | 130 | 0.25 | 42.0 | 2650 | 187.10 | 5.30 | .510 | 127.5 | 48.0 | |
| | | 60 | | 0.23 | 40.0 | 3150 | 222.39 | 6.30 | .655 | 163.8 | 53.0 | |
| 5915PC-22T-B30-SM0 | 220 | 50 | 145 | 0.25 | 42.0 | 2650 | 187.10 | 5.30 | .510 | 127.5 | 48.0 | |
| | | 60 | | 0.23 | 40.0 | 3150 | 222.39 | 6.30 | .655 | 163.8 | 53.0 | |
| 5915PC-23T-B30-SM0 | 230 | 50 | 150 | 0.22 | 42.0 | 2650 | 187.10 | 5.30 | .510 | 127.5 | 48.0 | |
| | | 60 | | 0.20 | 40.0 | 3150 | 222.39 | 6.30 | .655 | 163.8 | 53.0 | |
| 5915PC-24T-B30-SM0 | 240 | 50 | 155 | 0.20 | 39.0 | 2650 | 187.10 | 5.30 | .510 | 127.5 | 48.0 | |
| | | 60 | | 0.20 | 39.0 | 3150 | 222.39 | 6.30 | .655 | 163.8 | 53.0 | |

Rotation: Counterclockwise as seen from the label side.
Airflow Outlet: Label side

*1:Maximum Values in Free Air *3:Minimum Values in Free Air
*2:Average Values in Free Air

AC Axial Fans

Downloaded from Elcodis.com electronic components distributor