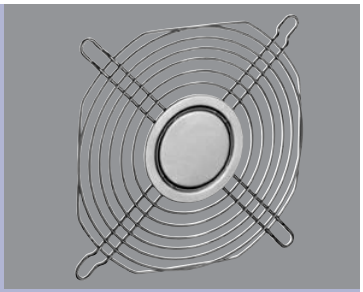

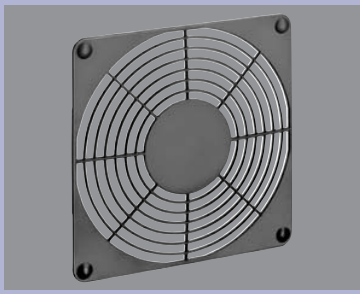

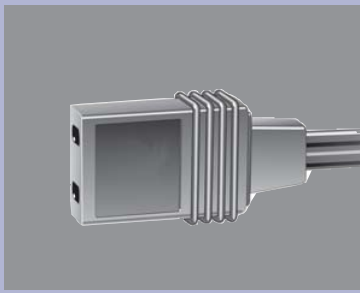

Downloaded from Elcodis.com electronic components distributor

Accessories

Finger Guards	146
Fan Finger Guards	151
Connector cable	153
Accessories	154

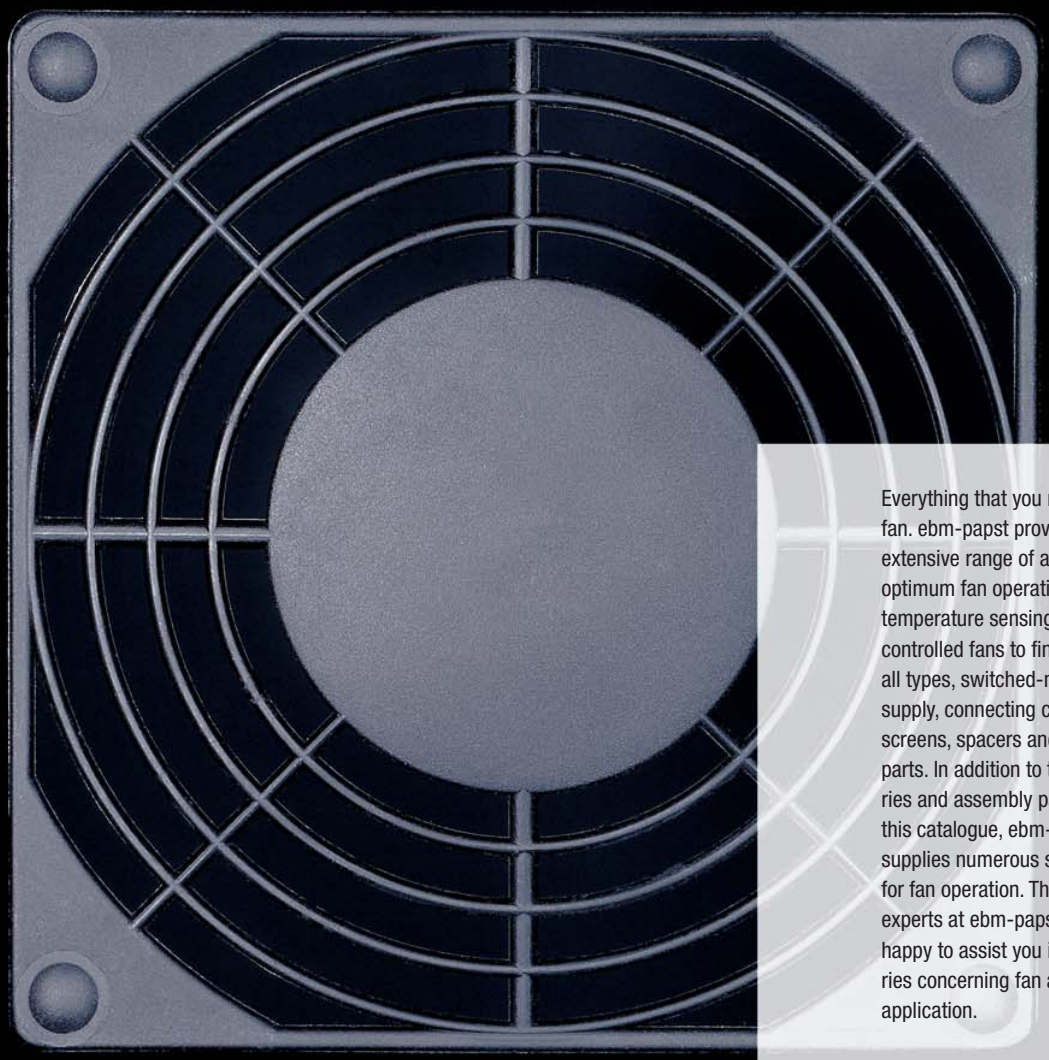

Everything that you need for your fan. ebm-papst provides an extensive range of accessories for optimum fan operation: From temperature sensing for speed-controlled fans to finger guards of all types, switched-mode power supply, connecting cable, filter, screens, spacers and assembly parts. In addition to the accessories and assembly parts listed in this catalogue, ebm-papst also supplies numerous special parts for fan operation. The sales experts at ebm-papst will be happy to assist you in your enquiries concerning fan assembly and application.

From selection to accessories: Insist on the efficient and reliable service provided by ebm-papst.

Downloaded from Elcodis.com electronic components distributor

Finger Guards

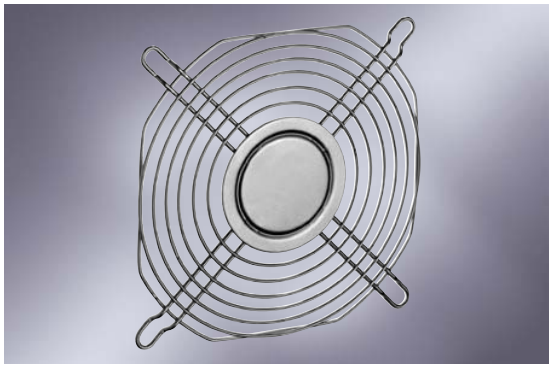

- Finger guards as per EN 294, of rust-proof steel wire for equipment fans.
- Further finger guards that do not conform to EN 294 can be supplied on request.

Fan series	Finger Guards
400	LZ29-1
500	LZ31
600	LZ28-1
3000	LZ23-1
8000	LZ32-4 / LZ22-2
9000	LZ30-4 / LZ 30
4000	LZ30-4 / LZ 30
5100	LZ25

Fan series	Finger Guards
5600	LZ25
5200	LZ35
5900	LZ35
7000	LZ36
6200	LZ37
6300	LZ 37
6400	LZ38

Fan series	Finger Guards	
DV 6200	LZ37	suction face
DV 6200	LZ39	blade face
DV 6400	LZ38	suction face
DV 6400	LZ39	blade face

LZ29-1 — **Fan size 40 x 40**

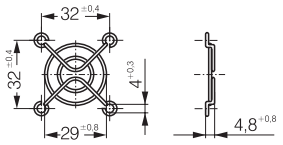

LZ31 — **Fan size 50 x 50**

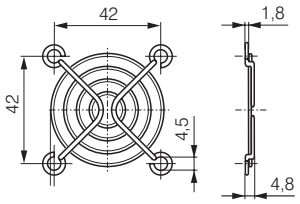

LZ28-1 — **Fan size 60 x 60**

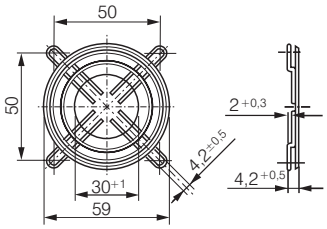

LZ23-1 — **Fan size 92 x 92**

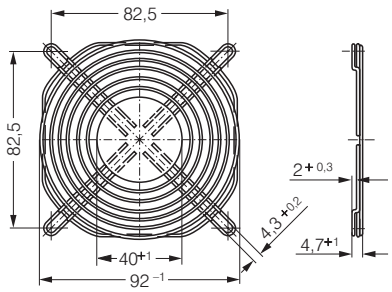

LZ32-4 — **Fan size 80 x 80**

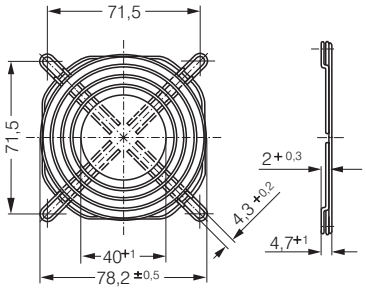

LZ30-4 — **Fan size 119 x 119**

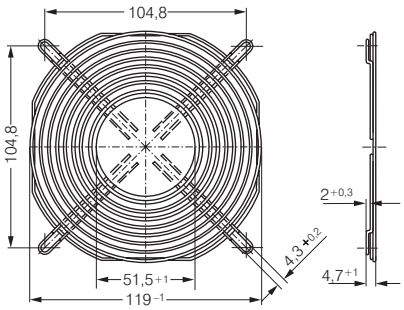

ebmpapst

Downloaded from Elcodis.com electronic components distributor

LZ25 — **Fan size 135 x 135**

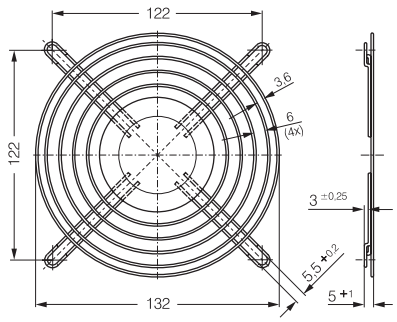

LZ35 — **Fan size 127 x 127**

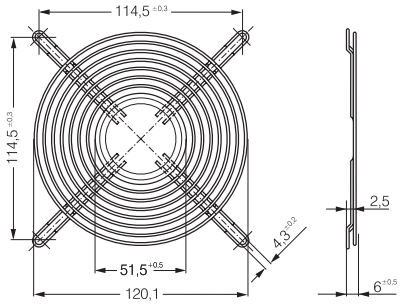

LZ36 — **Fan size 150 x 172**

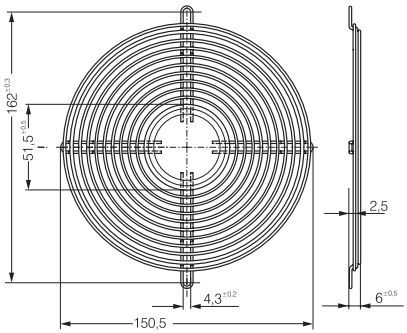

LZ37 — **Fan size 172 Ø x 51**

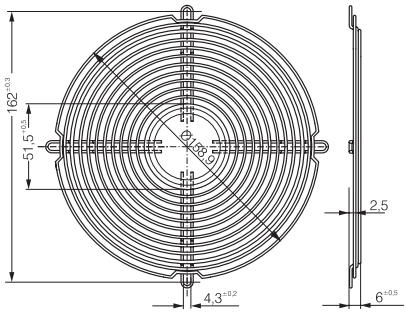

LZ38 — **Fan size 172 Ø x 51**

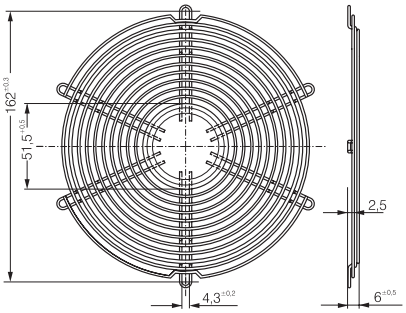

LZ39 — **Fan size 172 Ø x 51**

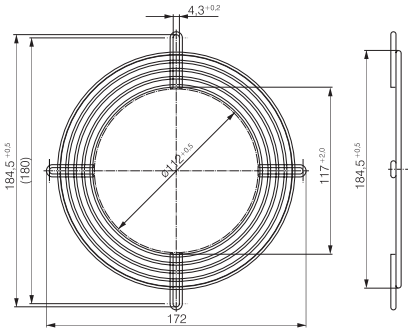

LZ30 — **Fan size 119 x 119**

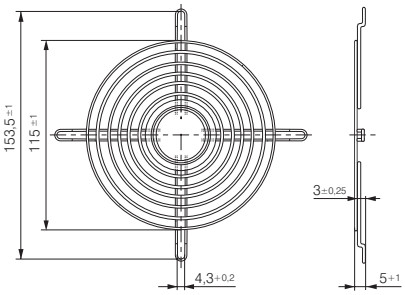

LZ22-2 — **Fan size 80 x 80**

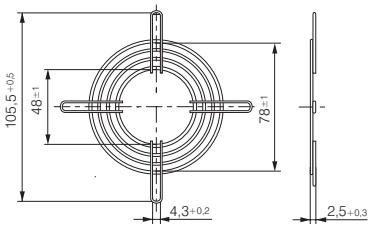

Downloaded from Elcodis.com electronic components distributor

ACmaxx Axial Fans Finger Guards

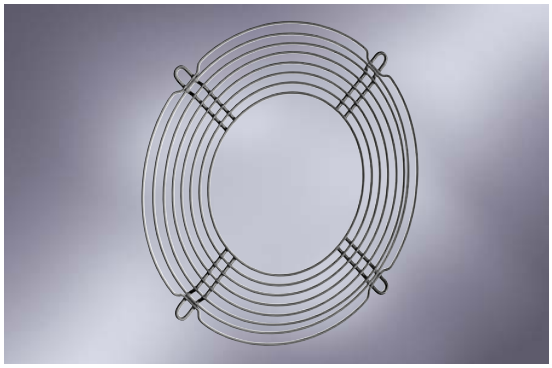

– Finger guards as per EN 294, of rust-proof steel wire for equipment fans.

Fan series	Finger Guards	
AC 8300	LZ32-4	suction face
AC 8300 H	*	blade face
AC 3200 J	LZ23-1	suction face
AC 3200 J	*	blade face
AC 4400 FN	LZ30-4	suction face
AC 4400 FN	LZ30-9	blade face
AC 4300	LZ30-4	suction face
AC 4300	LZ30-9	blade face

Fan series	Finger Guards	
AC 6200 N	LZ37	suction face
AC 6200 N	LZ37-2	blade face
AC 6100 N	LZ37	suction face
AC 6100 N	*	blade face

*Blade face finger guards on request.

LZ30-9 — **Fan size 119 X 119**

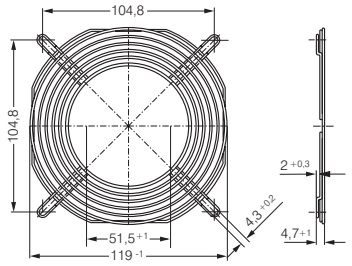

LZ30-4 — **Fan size 119 x 119**

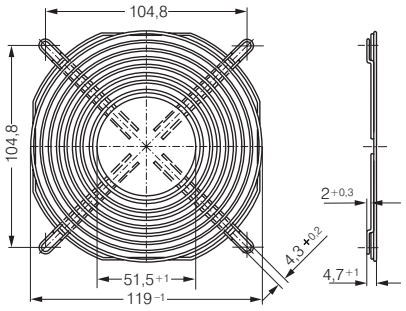

LZ32-4 — **Fan size 80 x 80**

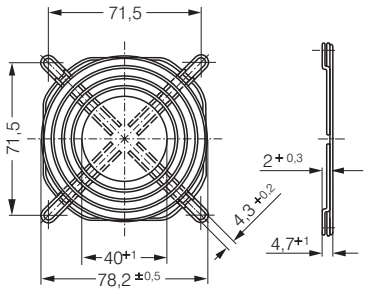

LZ37-2 — **Fan size 172 Ø X 51**

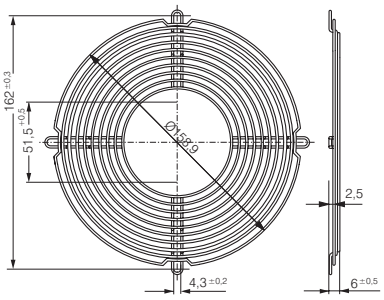

LZ37 — **Fan size 172 Ø x 51**

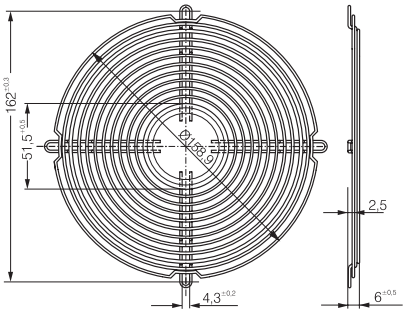

LZ23-1 — **Fan size 92 x 92**

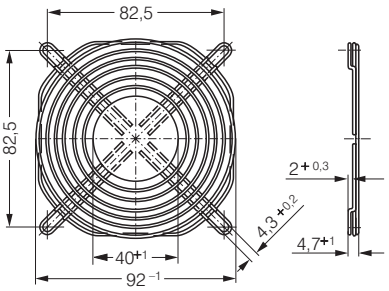

ebmpapst

Downloaded from Elcodis.com electronic components distributor

Finger Guards

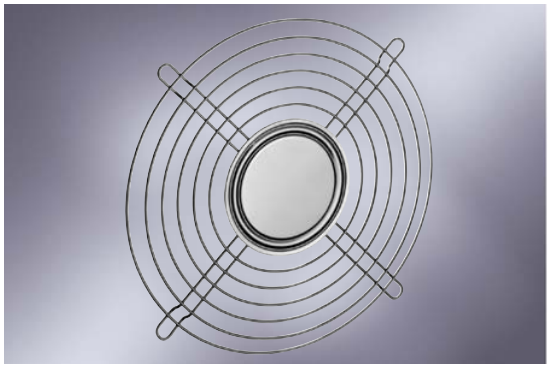

- Size 180: galvanised steel wire, chromatised in blue.
- Size 200 / 208 / 250: steel wire, plastic coated, silver metallic gloss.

Fan series	Finger Guards	Fan series	Finger Guards
W1G 180	26388-2-4039	W4S 200	78128-2-4039
W1G 200	78128-2-4039	W2E 208	35139-2-4039
W1G 208	35139-2-4039		35138-2-4039
	35138-2-4039	W2D 208	35139-2-4039
W1G 250	09418-2-4039		35138-2-4039
W2E 200	78128-2-4039	W2E 250	09418-2-4039

26388-2-4039 — **Fan size 180**

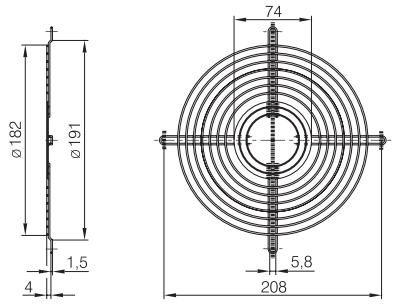

78128-2-4039 — **Fan size 200**

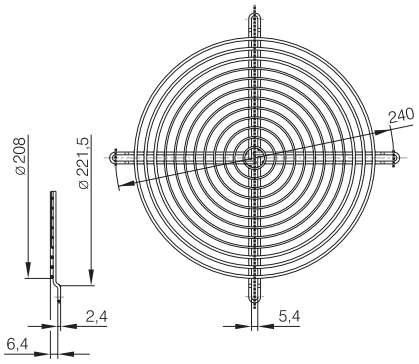

35139-2-4039 — **Fan size 208**

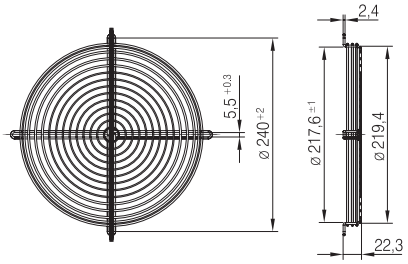

35138-2-4039 — **Fan size 208**

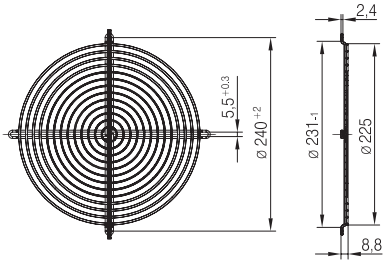

09418-2-4039 — **Fan size 250**

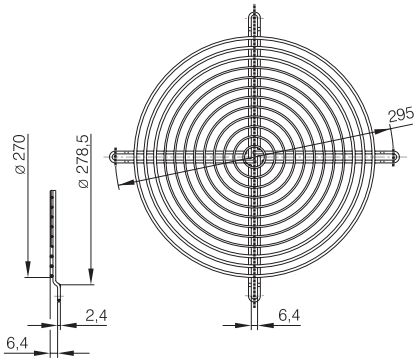

Downloaded from Elcodis.com electronic components distributor

Finger Guards

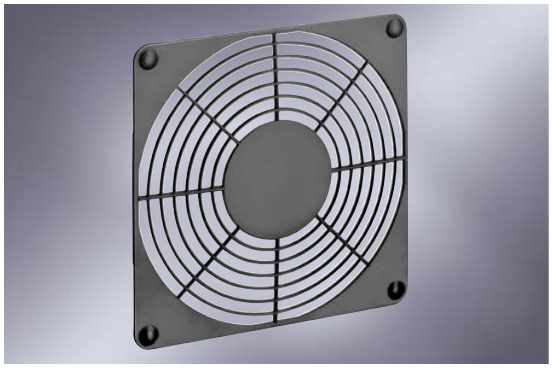

- Finger guards of black, fibreglass reinforced plastik (conform to EN 294).
- Plastic protective grilles must not be used for the following models:
  8200 JH3 / JH4
  3200 JH3 / JH4
  4100 NH5 - NH8

Finger Guards	Mounting	B	C	D	E	Finger Guards	Mounting	B	C	D	E
LZ32-2	A1	$80^{-0.5}$	$71.5^{\pm 0.2}$	7.0	34	LZ30-5	A2	$119^{-0.5}$	$105^{\pm 0.2}$	6.5	50
LZ32-3	A3	$80^{-0.5}$	$71.5^{\pm 0.2}$	7.0	34	LZ30-6	A4	$119^{-0.5}$	$105^{\pm 0.2}$	6.5	50
LZ23-2	A1	$92.5^{-0.5}$	$82.5^{\pm 0.2}$	6.5	46	LZ33-1	A2	$127^{-0.5}$	$113.5^{\pm 0.2}$	6.5	50
LZ23-3	A3	$92.5^{-0.5}$	$82.5^{\pm 0.2}$	6.5	46	LZ33-2	A4	$127^{-0.5}$	$113.5^{\pm 0.2}$	6.5	50

LZ32-2 / LZ32-3	Fan size 80 x 80
LZ23-2 / LZ23-3	Fan size 92 x 92
LZ30-5 / LZ30-6	Fan size 119 x 119
LZ33-1 / LZ33-2	Fan size 127 x 127

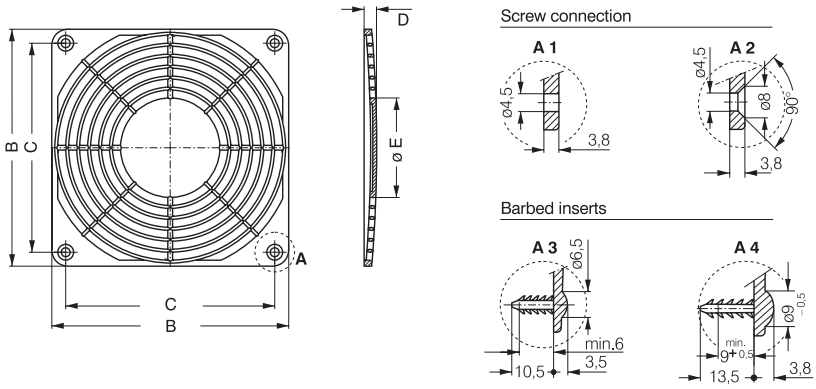

LZ32P	Fan size 80 x 80

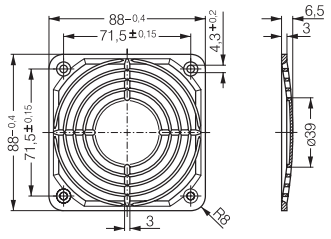

LZ30P	Fan size 119 x 119

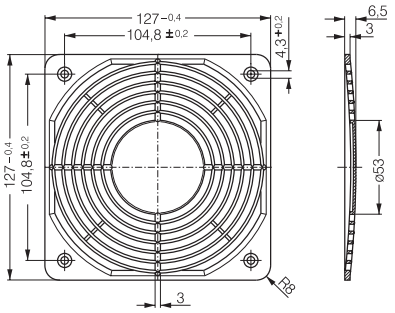

ebmpapst

Downloaded from Elcodis.com electronic components distributor

Fan Filter Guards

– Fan filter guards for installation on axial fan series for sizes 60 mm, 80 mm, 92 mm, 119 mm, 172 mm. All filter units fit directly onto the existing installation holes on the fans.
– Fan filter guards consist of 3 parts: the outer grille, the inner fastening plate and the replaceable filter mat.
– Grille is molded of polycarbonate (PC) with a matt surface.
– A quick-release on the grille allows for quick and easy filter mat replacement.
– Wire-mesh fastening plate, black powder coating.
– Filter mat replacement can be performed on running fans, welded wire-mesh protection.
– Filter mat made of white, synthetically bonded fibers.

Protection Filter	Fan size	A	B	C	D	Replacement filter*
FF60	60 x 60 mm	65	65	13.5	50.0	RF 60
FF80	80 x 80 mm	85	85	14.0	71.5	RF 80
FF92	92 x 92 mm	125	105	17.5	82.5	RF 92
FF119	119 x 119 mm	162	136	18.5	104.5	RF 119
FF172	ø 172 mm	226	190	19.5	162.0	RF 172

* Replacement filters only in packs of 5.

FF60 / FF80

Fan size: 60 x 60 mm
80 x 80 mm

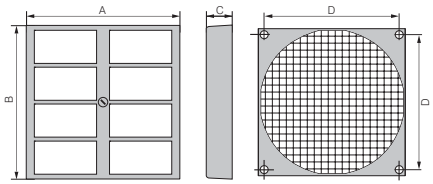

FF92 / FF 119 / FF 172

Fan size: 92 x 92 mm
119 x 119 mm
ø 172 mm

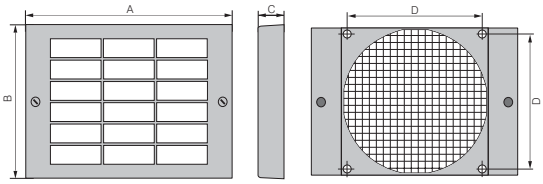

Filter capacity
A fan filter guard filters out up to 75% of dust particles up to a size of 5-10 microns and withstands temperatures of up to 100°C. Flame retardant in accordance with DIN 53438, grade F1. For installed, clean filters, an air flow reduction of 20 – 30% can be assumed.

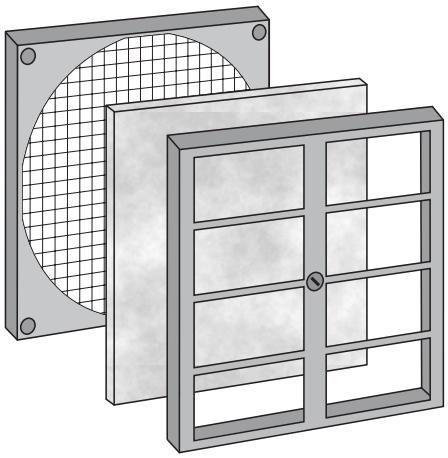

Downloaded from Elcodis.com electronic components distributor

Filter class

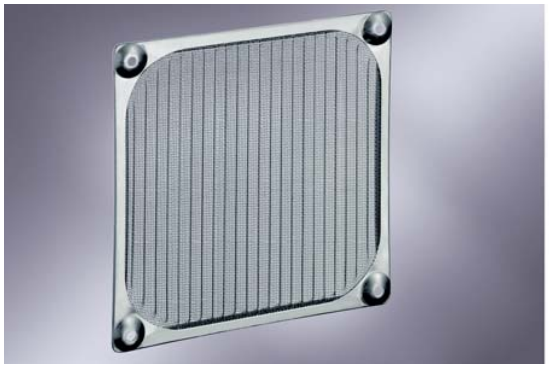

- Protective filter grille comprising mounting strap, filter and screen.
- Screen LZ40 N made of black, fiberglass-reinforced plastic with inserted wire netting (LZ60).
- LZ 60 filter made of Nirosta wire mesh.
- LZ40-1 mounting strap for assembly.

Fan series DC	Fan series AC
4400 F	AC 4300
4400 FN	9900
4300	4000 N
4300 N	4000 Z
4400	
4200	
4100 N	

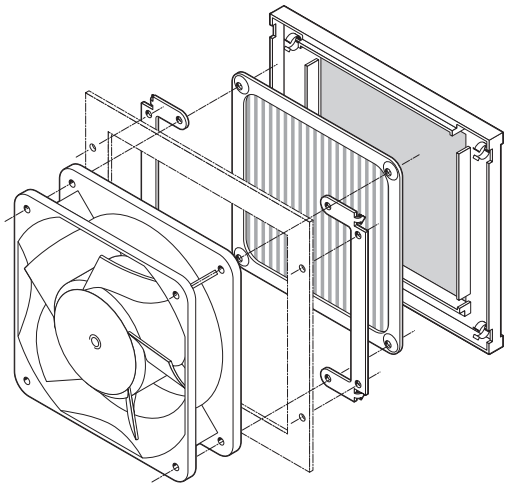

LZ40N	Screen

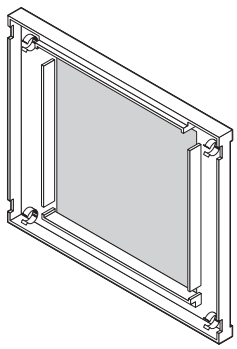

LZ40-1	Bracket

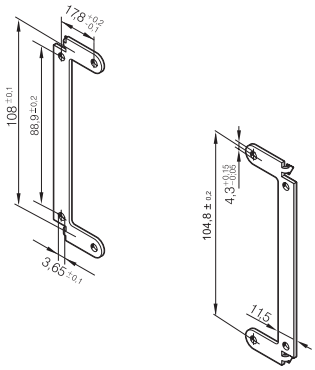

LZ60	Filter

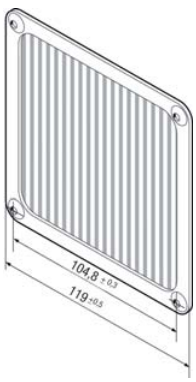

ebmpapst

Downloaded from Elcodis.com electronic components distributor

Connector cable

- Connector cable with injection moulded plug in various lengths.
- Strand ends with core-crimping sleeve, core-end sleeve or tin-plated.
- Straight or angled plug.
- For all types of fan with flat plug 2.8 / 3.0 x 0.5.

Plug model	L1 (mm)	Plug	Leads end	Leads colour	Application
LZ120	610	G	C	black/black	AC
LZ120-4	2 000	G	A	black/black	AC
LZ120-5	380	W	B	red/black	DC
LZ120-6	610	W	B	red/black	DC
LZ120-11	2 000	G	A	red/black	DC
LZ120-16	800	G	B	black/black	AC
LZ120-18	4 000	G	A	black/black	AC
LZ126	1 000	G	C	black/black	AC
LZ127	1 600	G	B	black/black	AC
LZ130-1	610	G	C	black/black	AC
LZ140	610	G	B	black/black	AC

Connector cable **Straight plug (G)**

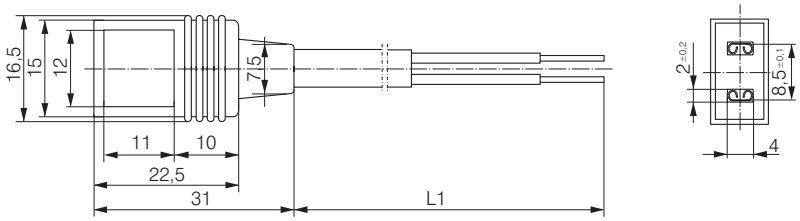

Connector cable **Angled plug (W)**

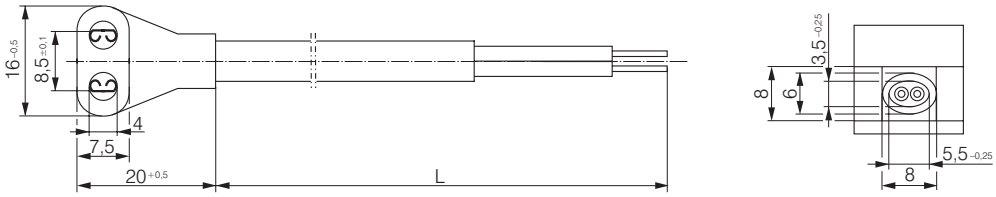

Core crimp sleeve **Leads end A**

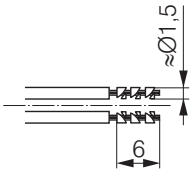

Tin-plated **Leads end B**

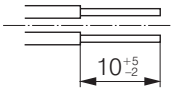

Core-end sleeve **Leads end C**

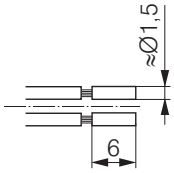

Downloaded from Elcodis.com electronic components distributor

Accessories

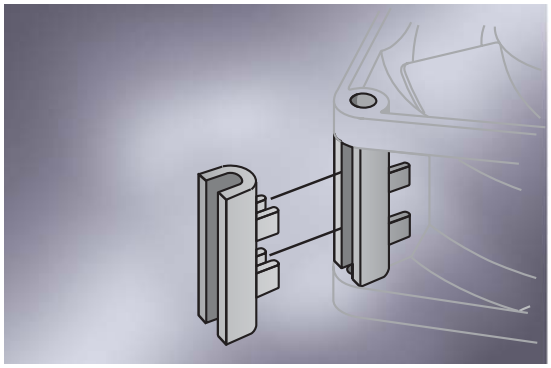

In addition to the accessories and assembly parts listed in this catalogue, ebm-papst also supplies numerous special parts for fans. The sales experts at ebm-papst will be happy to assist you in your enquiries concerning fan assembly and application.

Fan series	Accessories
8300	LZ212 / LZ260
8400 N	LZ261
3300	LZ212 / LZ260
3400 N	LZ261
9000	LZ210
4000	LZ210
4300	LZ212 / LZ260
8300	LZ212

Fan series	Accessories
5100	LZ210
5600	LZ210
5200	LZ210
5900	LZ210
7000	LZ210
VARIOFAN	LZ370

LZ212

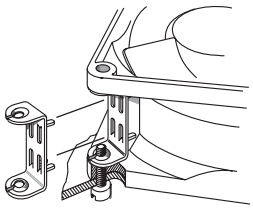

Screw clip of stainless steel.
For mounting fans with threaded pin 3.5 DIN EN ISO 1478 (7970).

LZ260 / LZ261

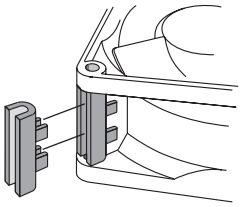

Spacer of fibreglass reinforced plastic. For screw mounting over both fan mounting flanges.

LZ210

Screw clip of hardened steel. For mounting fans with threaded pin 6-32 UNC and/or 3.5 DIN 7970.

LZ370

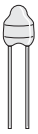

Required performance data:

R_{25}	= 100 KΩ ±5% @25°C
B-value	= 4190 ±2%
P_{max}	= 0,25 W

Temperature sensor for speed-controlled fan operation. Temperature range 30...50 °C.

LZ550

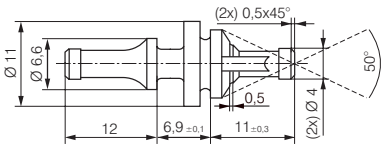

Rubber anti vibration mounts
for fans with a hole ø of 4.3 ±0.2 mm and flange thickness of 3 - 5.5 mm.
For a carrier plate with a hole ø of 6.5 ±0.15 mm and plate thickness of 1 - 2 mm.

Downloaded from Elcodis.com electronic components distributor

Downloaded from Elcodis.com electronic components distributor