13 Pin - Mini Wiring

CONNECTION DESCRIPTIONS

PIN#		DESCRIPTION
1	DP COM	CONNECT TO SELECTED DECIMAL POINT
2	DP1	DP XXX.X
3	DP2	DP XX.XX
4	DP COM	CONNECTED TO SELECTED DECIMAL POINT
5	DP3	DP X.XXX
6	IN HI	INPUT SIGNAL HI
7	IN LO	INPUT SIGNAL LO
8	V+	+5 VOLT POWER, +9V POWER
9	BL	CONNECT TO V- FOR BACKLIGHTING
10	V-	-5 VOLT POWER, GROUND FOR 5V, +9V
11	AG	CONNECT TO IN LO FOR 9V ISOLATED OPERATION
12	N.C.	} NO CONNECTION
13	N.C.	

POWER CONNECTIONS

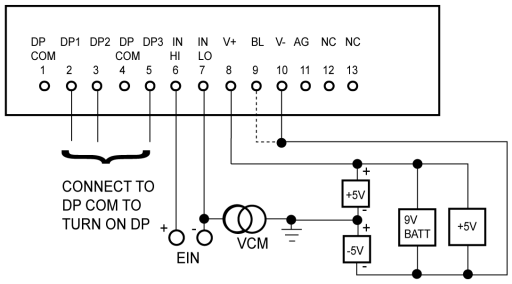

13 Pin - Mini Dimensions

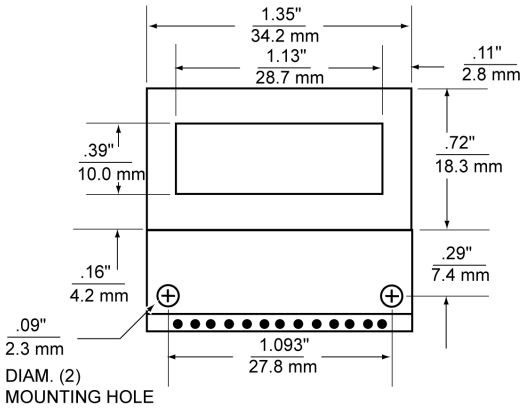

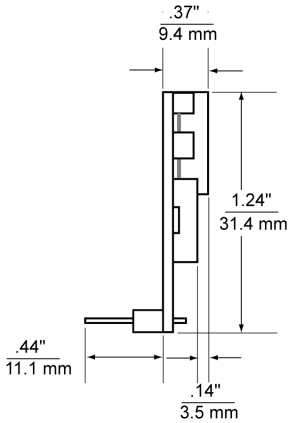

OPTIONAL BEZEL CUTOUT DIMENSIONS

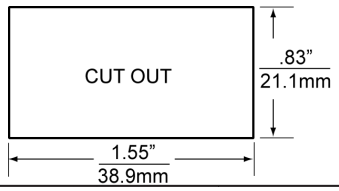

Downloaded from Elcodis.com electronic components distributor