THIS COPY IS PROVIDED ON A RESTRICTED BASIS AND IS NOT TO BE USED IN ANY WAY DETRIMENTAL TO THE INTERESTS OF PANDUIT CORP.

PART NO.	MATERIAL	PACKAGE QTY.
MMP350-C	304 SS.	100
MMP350-C316	316 SS.	100
MMP350-M	304 SS.	1000
MMP350-M316	316 SS.	1000

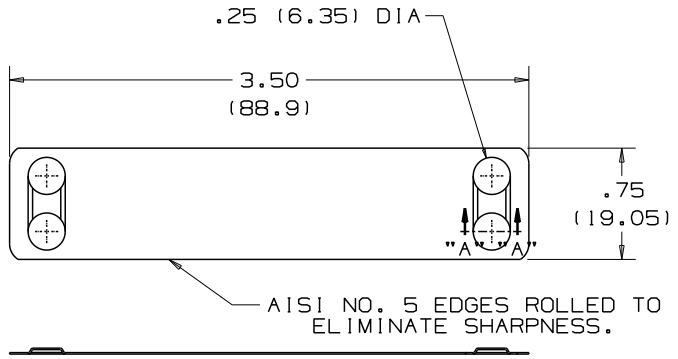

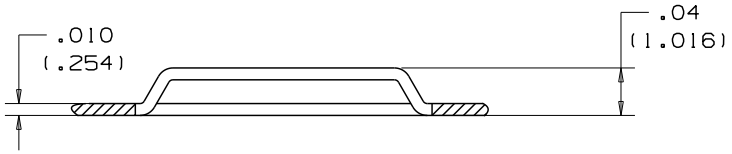

SECT "A-A"
SCALE: 8x

NOTES:

1. DIMENSIONS IN ( ) ARE mm.
2. CUSTOM PERMANENT MARKING AVAILABLE. CONSULT FACTORY.
3. USE WITH STD. CROSS SECTION MLT'S.
4. TOLERANCES (UNLESS OTHERWISE SPECIFIED)
   .xxx = ±.020 (.51)
   .xx = ±.03 (.8)

N41044BS_DC/04A

REV	DATE	BY	CHK	DESCRIPTION	ECN	PM	CUST
04A	8/08	JAMB	SKB	ORIG.CAD FILE SPEC WAS S41044_04. REMOVED NOTE 5. ADDED PACKAGE QTY.TO TABLE. ADDED PART NO,S FOR BULK QTY 1000 MARKER PLATES			
04	1/01	KMD	JD	ADDED NOTE 5. CAD FILE SPEC WAS N41044SA_PCD_03	07257		LA
03	11/96	JKD	JD	ADDED NOTE 4 MAT'L WAS 302/304 FOR MMP350	05241	MAS	LA
02	4/93	SM	SM	ADDED STK THK DIM	01532	GP	LA
01	6/92	DL	DL	ADDED HOLE DIA	01092	GP	LA
00	3/91	SM	JC	RELEASED	00378	GP	LA

PANDUIT CORP. TINLEY PARK, ILLINOIS

STANDARD METAL MARKER PLATE
CUSTOMER DRAWING

UNLESS OTHERWISE SPECIFIED, DIMENSIONAL TOLERANCES ARE:
(.X) ± (.XXX) ±
(.XX) ± ANGLES ±

UNLESS OTHERWISE SPECIFIED, ALL DIMENSIONS ARE GIVEN IN INCHES, THIRD ANGLE PROJECTION

DRAWN BY SAM
DATE 2/4/91
CHK'D LM
MAT'L STAINLESS STEEL
SCALE FULL & NOTED
DRAWING NO. N41044BS_DC
DWG. A SIZE

Downloaded from Elcodis.com electronic components distributor