This drawing is the property of Tusonix, Inc., and may not be used, reproduced, published or disclosed to others without expressed authorization by Tusonix Inc.

# MARKETING SALES DRAWING

**DIMENSIONS IN INCHES - DO NOT SCALE THIS DRAWING**
**DIMENSIONS IN METRIC - [ ]**

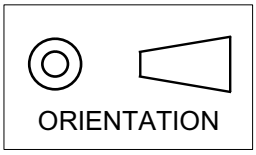


**Electrical Testing per Tusonix standard test plans and Mil-Std-202 Test Methods.**




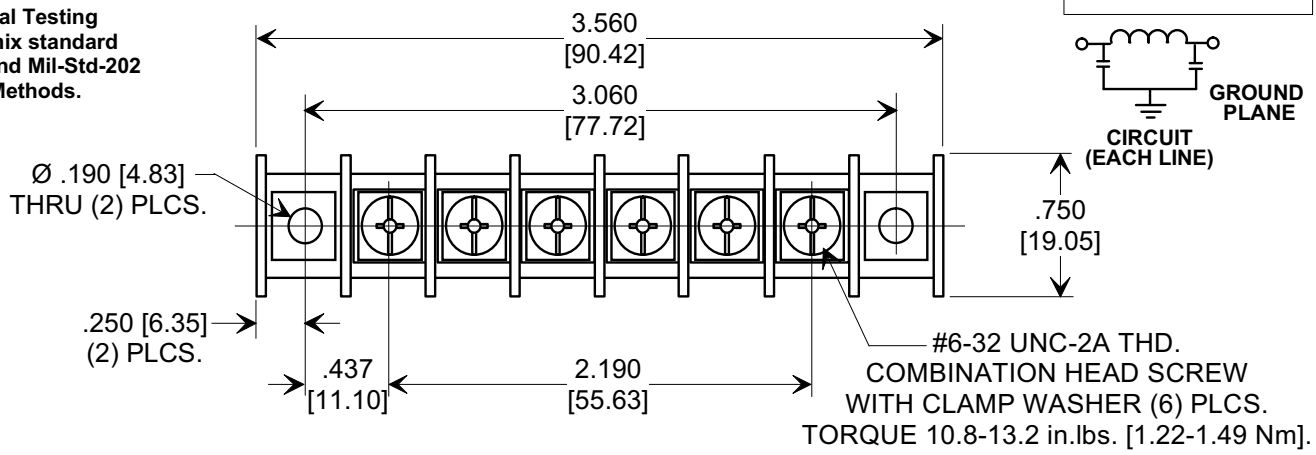


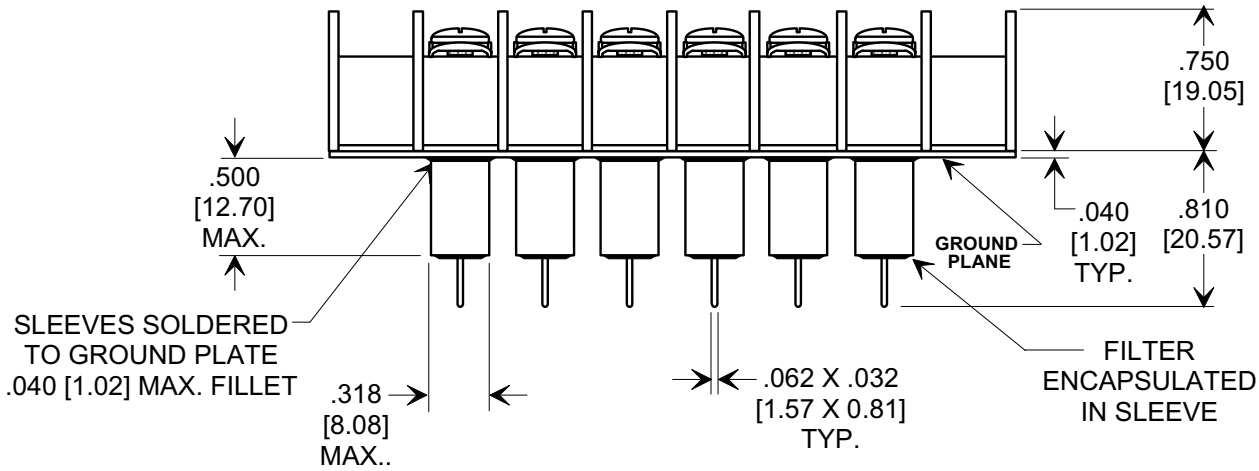


NOTES:
1. TUSONIX STANDARD PART NUMBER: 7606-501N.
   TUSONIX RoHS COMPLIANT PART NUMBER: 7606-501N LF.
   CUSTOMER MUST SPECIFY STANDARD OR RoHS PART NUMBER WHEN ORDERING.
2. LEAD FINISH: MATTE TIN.
3. PLATE MATERIAL: .040" [1.02] COPPER ALLOY, MATTE TIN FINISH.
4. PART MARKING: TRADEMARK, PART NUMBER, DATE CODE, AND UL RECOGNITION:
   WHITE INK. RoHS PART: GREEN INK DOT.
5. MAX. SOLDERING TEMPERATURE 500°F [260°C].
6. BLOCK MOUNTING: RECOMMENDED MOUNTING SCREWS
   (# 8 PAN HEAD). TORQUE 4.5-5.5 in. lbs. [0.51-0.62 Nm] MAX.
7. MOLDED MATERIAL: HIGH TEMPERATURE THERMOPLASTIC (PBT), UL RATED 94 V-O.
8. U.L. FILE NO. E201344.

| Cx (pF) | WORKING VOLTAGE -40°C TO +125°C | $I_{DC}$ | I.R. MIN. @ 100 (VDC.) | DWV (VAC) | TYPICAL NO LOAD INSERTION LOSS (dB) @ 25°C PER MIL-STD-220 | | | |
|---|---|---|---|---|---|---|---|---|
| | | | | | 10 MHz | 100 MHz | 1 GHz | 10 GHz |
| 2000 MIN. | 250 VAC | 20 Amps | 10 G Ω | 1500 | 5 | 50 | 60 | 65 |

| REVISION RECORD | | |
|---|---|---|
| A | Original Release | C.O. ECO-664 |

X-2015 Rev-0

TOLERANCES unless otherwise specified
2 PLC. DECIMAL ± N/A
3 PLC. DECIMAL ± .030 [0.76]
ANGLES ± N/A

TUSONIX
TUCSON, ARIZONA

Title **FILTERED TERMINAL BLOCK 6 POSITION, UL RECOGNIZED**

Drawn L.E. 04-15-09
Scale FULL
Approved R.L. 04-15-09

A **7606-501N**

Downloaded from Elcodis.com electronic components distributor