MARKETING SALES DRAWING

DIMENSIONS IN INCHES - DO NOT SCALE THIS DRAWING
DIMENSIONS IN METRIC - [ ]

This drawing is the property of Tusonix, Inc., and may not be used, reproduced, published or disclosed to others without expressed authorization by Tusonix Inc.

Electrical Testing per Tusonix standard test plans and Mil-Std-202 Test Methods.

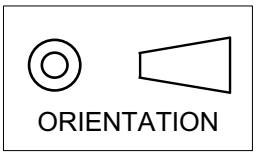

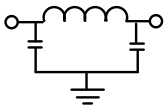

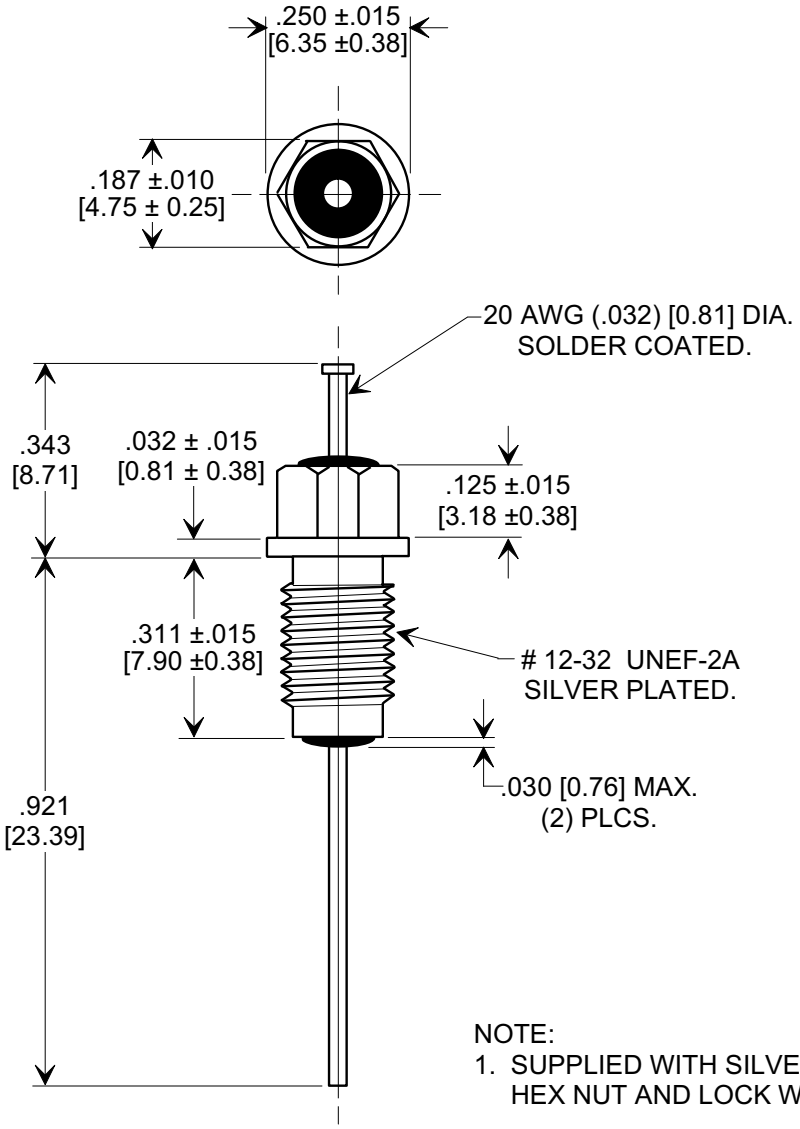

NOTE:
1. SUPPLIED WITH SILVER PLATED HEX NUT AND LOCK WASHER.

MIN. CAP. (pF)	WORKING VOLTAGE (WVdc)	CURRENT IDC	MINIMUM NO LOAD INSERTION LOSS (dB) AT 25°C PER MIL-STD -220			
	125 °C		50 MHz	100 MHz	1 GHz	10 GHz
1500	200	10 A	32	45	70	70

REVISION RECORD
A
Original Release
C.O. ECO-666
X-2015 Rev-0

TOLERANCES unless otherwise specified
2 PLC. DECIMAL ±
3 PLC. DECIMAL ± .031 [0.79]
ANGLES ±

TUSONIX
TUCSON, ARIZONA

Title **M15733/61-0005 BUSHING STYLE EMI FILTER**

Drawn L.E. 04-15-09
Scale X 3
Approved R.L. 04-15-09

A **4203-502**

Downloaded from Elcodis.com electronic components distributor