HZ0603C651R-10

UNCONTROLLED DOCUMENT

PHYSICAL DIMENSIONS:

A	1.60 [.063]	±	0.15	[.006]
B	0.80 [.031]	±	0.15	[.006]
C	0.80 [.031]	±	0.15	[.006]
D	0.36 [.014]	±	0.15	[.006]

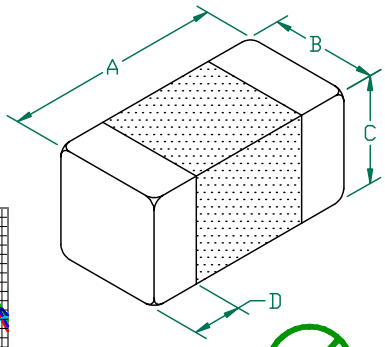

ELECTRICAL CHARACTERISTICS:			
Z @ 100MHz (Ω)		DCR (Ω)	Rated Current
Nominal	650		
Minimum	488		
Maximum	813	0.60	300 mA

NOTES: UNLESS OTHERWISE SPECIFIED

1. TAPED AND REELED per CURRENT EIA SPECIFICATIONS 7" REELS, 4000 PCS/REEL.
2. TERMINATION FINISH IS 100% TIN.
3. COMPONENTS SHOULD BE ADEQUATELY PREHEATED BEFORE SOLDERING.

Z vs FREQUENCY
IMPEDANCE UNDER DC BIAS

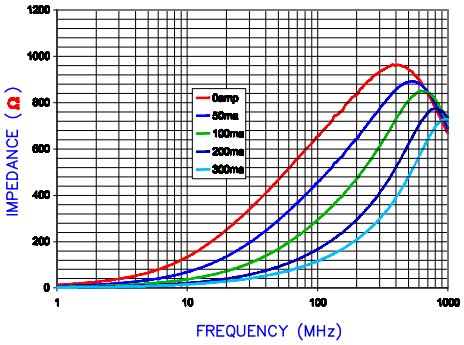

|Z| , R, AND X vs. FREQUENCY

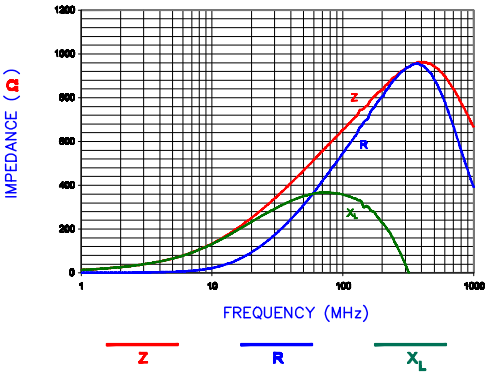

AGILENT E4991A RF Impedance/Material Analyzer
HP 16194A Test Fixture. TEST REF. 3124

LAND PATTERNS FOR REFLOW SOLDERING

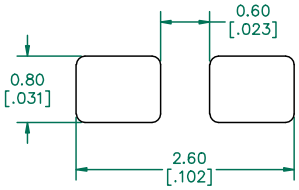

(For wave soldering, add 0.762 (.030) to this dimension)

RECOMMENDED SOLDERING CONDITIONS

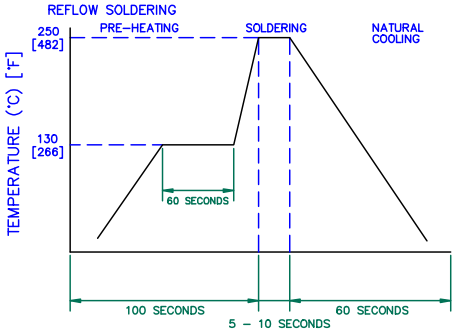

RoHS 2002/95/EC

DIMENSIONS ARE IN mm [INCHES].			
B	UPDATE COMPANY LOGO ADD ROHS	02/27/08	JRK
A	ORIGINAL DRAFT	04/03/04	TMB
REV	DESCRIPTION	DATE	INT

This print is the property of Laird Tech. and is loaned in confidence subject to return upon request and with the understanding that no copies shall be made without the written consent of Laird Tech. All rights to design or invention are reserved.

Laird TECHNOLOGIES

PROJECT/PART NUMBER:	REV	PART TYPE:	DRAWN BY:
HZ0603C651R-10	B	CO-FIRE	TMB

DATE:	SCALE:	SHEET:
04/03/04	–	2 of 2
CAD # HZ0603C651R-10-B	TOOL # –	

Downloaded from Elcodis.com electronic components distributor