LI0603E151R-10

UNCONTROLLED DOCUMENT

PHYSICAL DIMENSIONS:

A	1.60 [.063]	± 0.15	[.006]
B	0.80 [.031]	± 0.15	[.006]
C	0.80 [.031]	± 0.15	[.006]
D	0.36 [.014]	± 0.15	[.006]

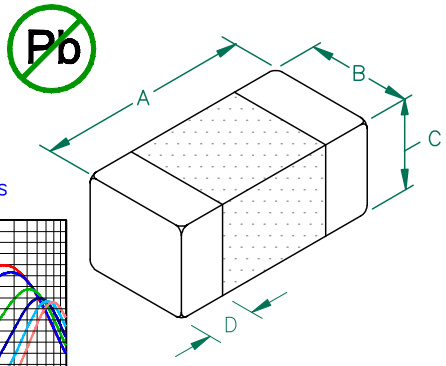

ELECTRICAL CHARACTERISTICS:

	Z @ 100MHz (Ω)	DCR (Ω)	Rated Current
Nominal	150		
Minimum	113		
Maximum	188	0.25	500 mA

NOTES: UNLESS OTHERWISE SPECIFIED

1. TAPED AND REELED per CURRENT EIA SPECIFICATIONS 7" REELS, 4000 PCS/REEL.
2. COMPONENTS SHOULD BE ADEQUATELY PREHEATED BEFORE SOLDERING.
3. TERMINATION FINISH IS 100% TIN.

Z vs FREQUENCY
IMPEDANCE UNDER DC BIAS

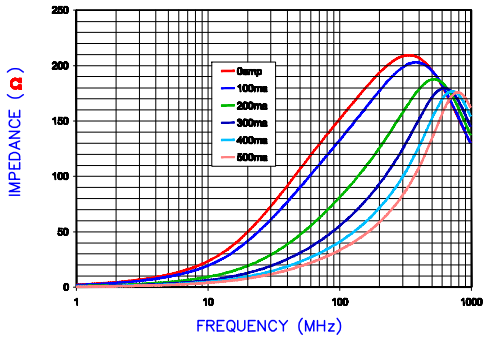

|Z| , R, AND X vs. FREQUENCY

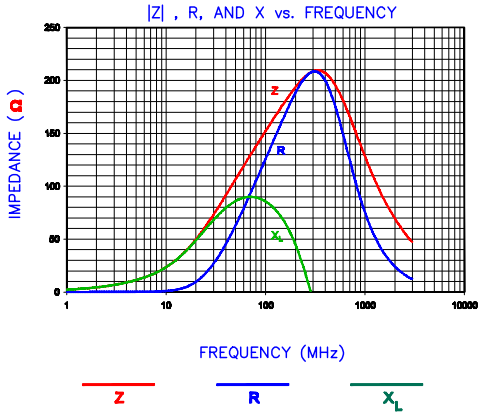

LAND PATTERNS FOR REFLOW SOLDERING

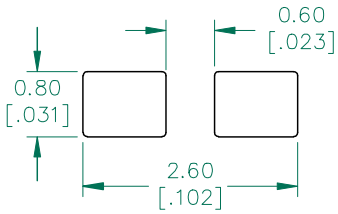

(For wave soldering, add 0.762 [.030] to this dimension)

RECOMMENDED SOLDERING CONDITIONS

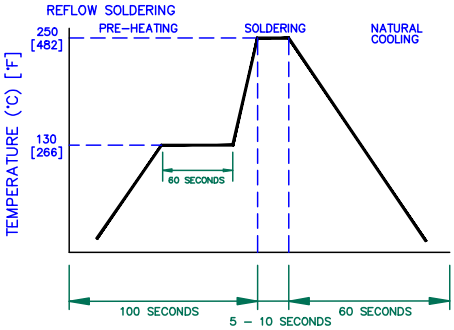

RoHS 2002/95/EC

AGILENT E4991A RF Impedance/Material Analyzer
HP 16194A Test Fixture. TEST REF. 3235

DIMENSIONS ARE IN mm [INCHES].

REV	DESCRIPTION	DATE	INT
B	UPDATE COMPANY LOGO ADD ROHS SYM	07/14/08	JRK
A	ORIGINAL DRAFT	04/19/04	JRK

This print is the property of Laird Tech. and is loaned in confidence subject to return upon request and with the understanding that no copies shall be made without the written consent of Laird Tech. All rights to design or invention are reserved.

Laird TECHNOLOGIES

PROJECT/PART NUMBER:	REV	PART TYPE:	DRAWN BY:
LI0603E151R-10	B	CO-FIRE	JRK

DATE: 04/19/04 | SCALE: – | SHEET: 2 of 2
CAD # LI0603E151R-10-B | TOOL # –

Downloaded from Elcodis.com electronic components distributor