BFB 75 x 75 x 25 MM SERIES

* Bearing Type
  Ball Bearings
* Material
  Impeller & Frame : Plastic (UL94V-0)
* Lead Wires :
  UL 1007 AWG#24 OR Equivalent
  Red Wire Positive (+)
  Black Wire Negative (-)
* Weight : 90.0g (3.17 oz)

DIMENSIONS DRAWING

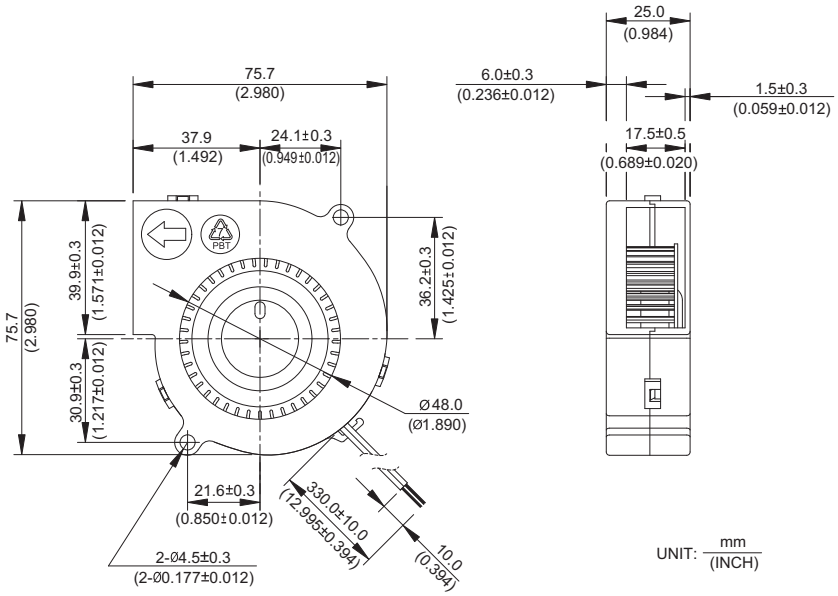

P & Q CURVE (AT RATED VOLTAGE)

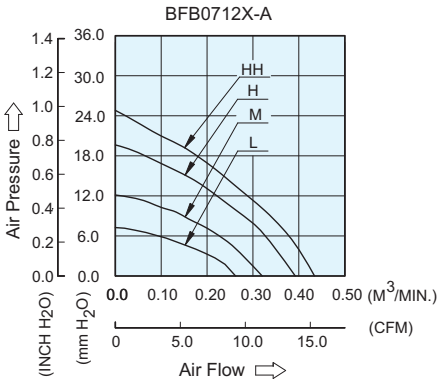

MODEL			Rated Voltage	Operating Voltage Range	Input Current	Input Power	Speed	Maximum Air Flow		Maximum Air Pressure		Noise
PART NO.	REV.	FUNCTION	VDC	VDC	Amp	Watt	R.P.M.	m^3 /min	CFM	mmH_2O	IN H_2O	dB-A
BFB0712L	-A	-F00	12	7.0 to 13.8	0.10	1.20	2800	0.262	9.26	7.26	0.286	39.0
BFB0712M	-A	-F00	12	7.0 to 13.8	0.16	1.92	3400	0.320	11.31	12.14	0.478	43.0
BFB0712H	-A	-F00	12	7.0 to 13.8	0.27	3.24	4000	0.392	13.84	19.64	0.773	48.0
BFB0712HH	-A	-F00	12	7.0 to 13.8	0.34	4.08	4400	0.434	15.33	24.82	0.977	51.0

* Function type is optional.
* The max. air flow and the speed are measured in free air ; max. air pressure is measured at zero air flow.
* Noise is measured in anechoic chamber in free air, one meter from intake side.
* All readings are typical values at rated voltage.
* Specifications are subject to change without notice.

Downloaded from Elcodis.com electronic components distributor