# DC axial compact fan

**ebm-papst St. Georgen GmbH & Co. KG**
Hermann-Papst-Straße 1
78112 St. Georgen
Phone: +49 7724 81-0
Fax: +49 7724 81-1309
www.ebmpapst.com
info2@de.ebmpapst.com

## Nominal data

| Type | 8318 | |
|---|---|---|
| Nominal voltage | [VDC] | 48 |
| Nominal voltage range | [VDC] | 36 .. 56 |
| Speed | [$min^{-1}$] | 3300 |
| Power input | [W] | 2.6 |
| Min. ambient temperature | [°C] | -20 |
| Max. ambient temperature | [°C] | 75 |
| Air flow | [$m^3/h$] | 54 |
| Sound power level | [B] | 5.2 |
| Sound pressure level | [dB(A)] | 36 |

ml = max. load · me = max. efficiency · rfa = running at free air · cs = customer specs · cu = customer unit
Subject to alterations





Downloaded from Elcodis.com electronic components distributor

# DC axial compact fan

## Technical features

| | |
|---|---|
| **Dimensions** | 80 x 80 x 32 mm |
| **General description** | Optional Vario-Pro: Highly flexible software configuration for the fan ensures an easily customizable solution to meet the individual requirements of your application. Electronic commutation completely integrated. |
| **Connection line** | Single strands AWG 22, TR 64, bared and tin-plated. |
| **Locked-rotor protection** | Blocking and overload protection |
| **Direction of protection** | Right, looking at rotor |
| **Direction of air flow** | Air exhaust over bars |
| **Bearing** | Ball bearings |
| **Lifetime L10 at 40 °C** | 70000 h |
| **Lifetime L10 at maximum temperature** | 30000 h |
| **Mass** | 0.170 kg |
| **Housing material** | Fiberglass-reinforced PBT plastic |
| **Material of impeller** | Fiberglass-reinforced PA plastic |
| **Motor protection** | Protected against reverse polarity and locking. |
| **Option** | Speed signal, alarm signal, Vario-Pro |
| **Approval** | VDE, CSA, UL, CE |



ebm-papst St. Georgen GmbH & Co. KG · Hermann-Papst-Straße 1 · 78112 St. Georgen · Phone: +49 7724 81-0 · Fax: +49 7724 81-1309 · www.ebmpapst.com · info2@de.ebmpapst.com

Downloaded from Elcodis.com electronic components distributor

# DC axial compact fan

## Product drawing

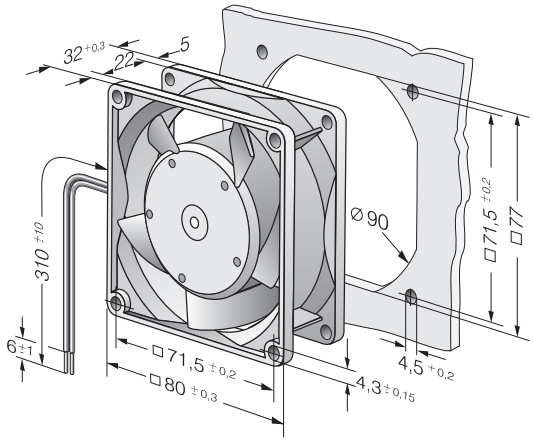




ebm-papst St. Georgen GmbH & Co. KG · Hermann-Papst-Straße 1 · 78112 St. Georgen · Phone: +49 7724 81-0 · Fax: +49 7724 81-1309 · www.ebmpapst.com · info2@de.ebmpapst.com

Downloaded from Elcodis.com electronic components distributor

## Charts: Air flow

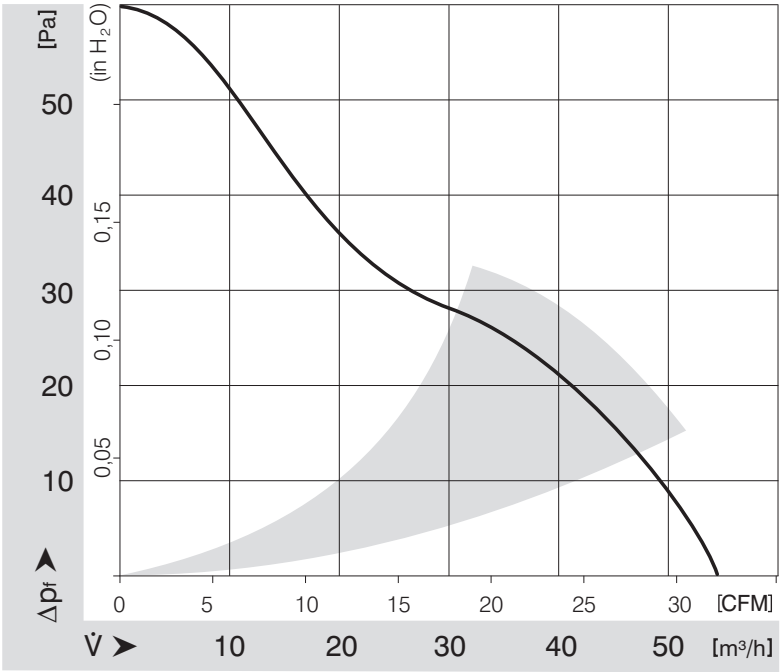




ebm-papst St. Georgen GmbH & Co. KG · Hermann-Papst-Straße 1 · 78112 St. Georgen · Phone: +49 7724 81-0 · Fax: +49 7724 81-1309 · www.ebmpapst.com · info2@de.ebmpapst.com

Downloaded from Elcodis.com electronic components distributor