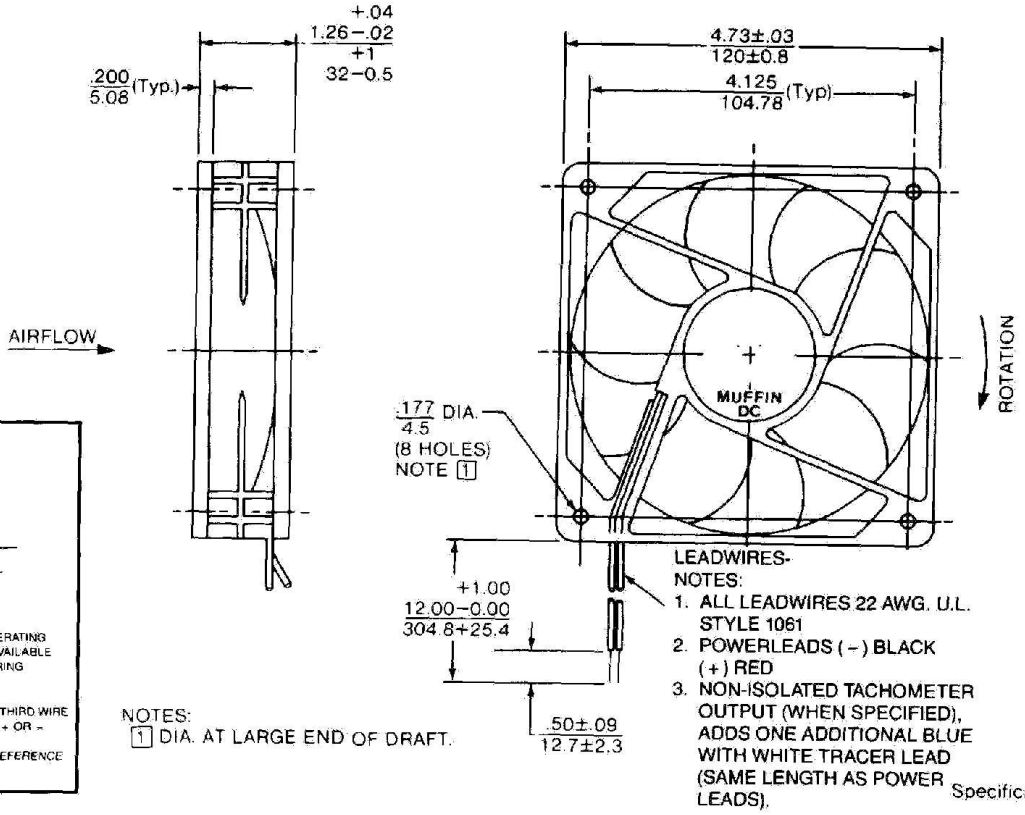

NOTES:
1 DIA. AT LARGE END OF DRAFT.

LEADWIRES-
NOTES:
1. ALL LEADWIRES 22 AWG. U.L. STYLE 1061
2. POWERLEADS (−) BLACK (+) RED
3. NON-ISOLATED TACHOMETER OUTPUT (WHEN SPECIFIED), ADDS ONE ADDITIONAL BLUE WITH WHITE TRACER LEAD (SAME LENGTH AS POWER LEADS).

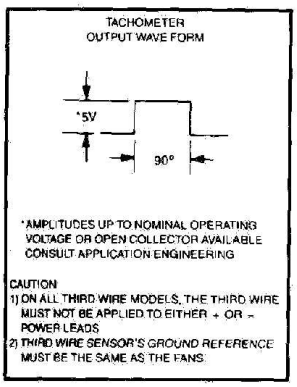

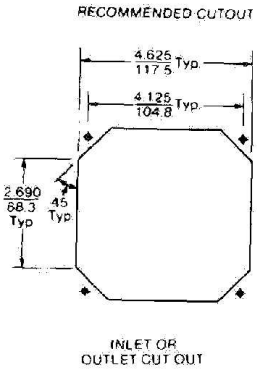

DIMENSIONS: in / mm ±
TOLERANCES: .xx= .03 / 0.8
.xxx= .010 / .25
ANGULAR ±2°
(UNLESS NOTED)

Specifications subject to change without notice.

Downloaded from Elcodis.com electronic components distributor