SR4P3-C4

OPERATING CHARACTERISTICS 1 5

OPERATE MAX	25 GAUSS
RELEASE MIN	5 GAUSS
DIFF MIN	2 GAUSS

(TEMP RANGE -40°C TO 85°C)

ABSOLUTE MAXIMUM RATINGS

SUPPLY VOLTAGE (VS) 7	3.8 VDC TO 30 VDC
VOLTAGE EXTERNALLY APPLIED TO OUTPUT	+30 VOLTS DC MAX WITH SWITCH IN "OFF" CONDITION ONLY -0.5 VOLTS MAX WITH SWITCH IN "OFF" OR "ON" CONDITION
OUTPUT CURRENT	20 mA
TEMPERATURE OPERATE AND STORAGE	-40° C TO 85° C
MAGNETIC FLUX	NO LIMIT, THE CIRCUIT CANNOT BE DAMAGED BY MAGNETIC OVERDRIVE

ELECTRICAL CHARACTERISTICS

	MIN	TYP	MAX	REMARKS
SUPPLY CURRENT 4		6.0 mA	11.0 mA	Vs = 3.8-30 VOLTS 7
OUTPUT VOLTAGE 5 (OPERATED)		0.25 V	0.4 V	SINKING 20 mA MAX
OUTPUT LEAKAGE 5 CURRENT (RELEASED)			10 μA	LEAKAGE INTO SWITCH OUTPUT
OUTPUT SWITCHING TIME				
RISE TIME 5		0.2 μ SEC	1.5 μ SEC	10% TO 90%
FALL TIME		0.1 μ SEC	1.5 μ SEC	90% TO 10%

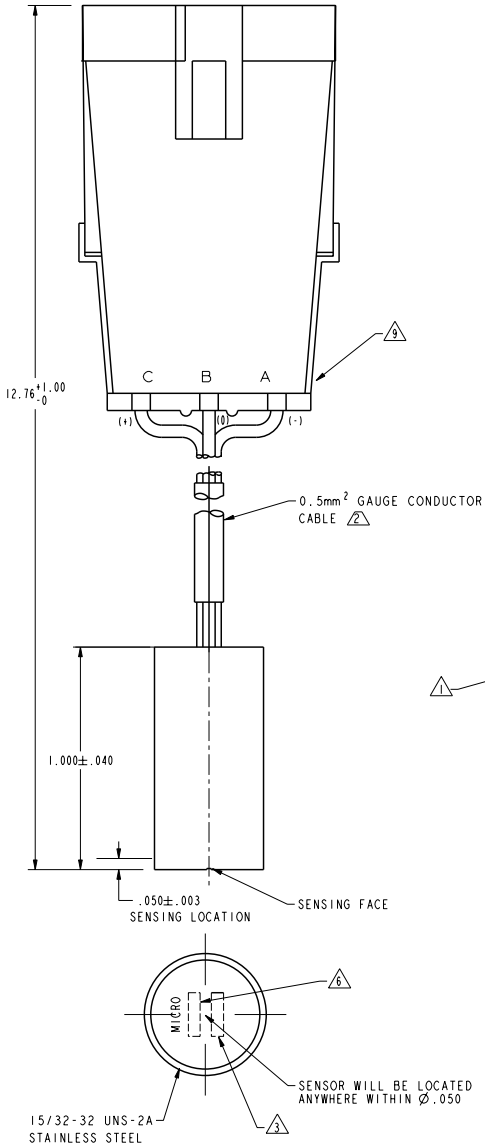

FIG. 1

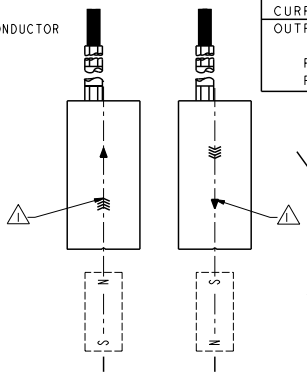

FIG. 2
OPERATE

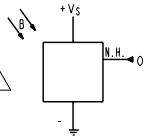

SWITCH SYMBOL

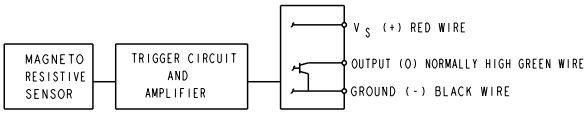

BLOCK DIAGRAM SHOWING CURRENT SINKING OUTPUTS

NOTES

1. FLUX ENTERING THE SOUTH POLE OR THE NORTH POLE OF THE MAGNET WILL OPERATE THE SENSOR WHEN MAGNET IS POSITIONED AS SHOWN IN FIGURE 2. THIS ASSUMES THE CONVENTION THAT THE DIRECTION OF THE EXTERNAL FLUX OF A MAGNET IS FROM THE NORTH TO THE SOUTH POLE OF THE MAGNET
2. 0.5mm² GAUGE PVC INSULATED CONDUCTORS WITH MOLDED PVC JACKET
3. DATE CODE LOCATED IN THIS AREA
4. SUPPLY CURRENT RATINGS MEASURED AT TEMPERATURES INDICATED "TYP" 24°C±2°C "MAX" -40°C TO 85°C
5. AT SUPPLY VOLTAGE OF 3.8 TO 30 VOLTS AND TEMPERATURE RANGE OF -40 TO 85°C
6. CATALOG LISTING LOCATED IN THIS AREA
7. Vs IS THE UNREGULATED SUPPLY VOLTAGE
8. THE MAGNETIC CHARACTERISTICS OF THE SWITCH MAY BE AFFECTED BY STRAY MAGNETIC FIELDS
9. PACKARD ELECTRIC WEATHER PACK CONNECTOR INCLUDING CONNECTOR HOUSING NO. 12010791
10. SLIGHT ROTATION OF SENSOR MAY BE REQUIRED TO ACHIEVE MAXIMUM SENSITIVITY

THIS DRAWING COVERS A PROPRIETARY ITEM AND IS THE PROPERTY OF MICRO SWITCH, A DIVISION OF HONEYWELL. THIS DRAWING IS NOT TO BE COPIED OR USED WITHOUT THE APPROVAL OF MICRO SWITCH.

MICRO SWITCH a Honeywell Division
FED. MFG. CODE 91929

MAGNETICALLY OPERATED CYLINDRICAL MAGNETO RESISTIVE SWITCH

CATALOG LISTING
SR4P3-C4

ANSI Y14.5M-1982 APPLIES

THIRD ANGLE PROJECTION
SCALE 3 : 1
DO NOT SCALE PRINT

UNLESS OTHERWISE SPECIFIED TOLERANCES ARE

ONE PLACE	(.0)	±.030
TWO PLACES	(.00)	±.015
THREE PLACES	(.000)	±.005
ANGLES		±

WEIGHT

SR4P3-C4 | DRAWING NUMBER | SHEET 1 of 1 | RELEASE NO. PR-24150 | REPLACES
ISSUE 1 | CHECK | REVISIONS
CHECK | CHECK | 19JUL99 | JAF | CHECK | 19JUL99 | KED | DRAWN | 20 | PTC/CAD

Downloaded from Elcodis.com electronic components distributor