MICRO SWITCH
FREEPORT, ILLINOIS, U.S.A.
A DIVISION OF HONEYWELL
FED. MFG. CODE 91929

SWITCH-ENCLOSED

CATALOG LISTING
5LS8

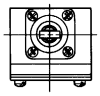

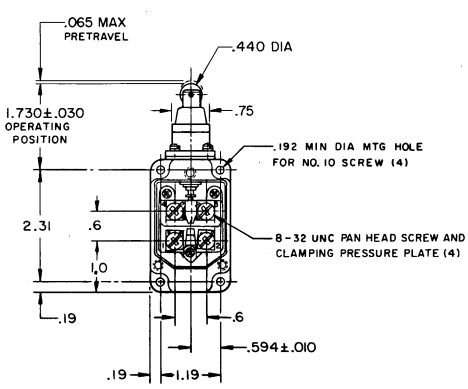

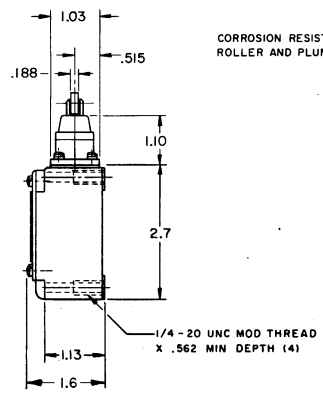

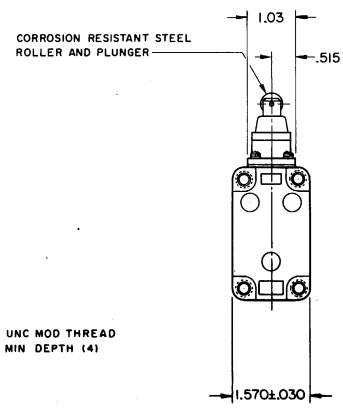

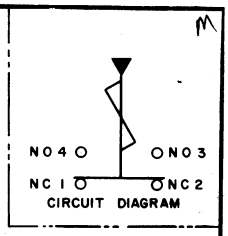

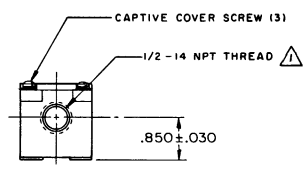

NOTE -

1 SEAL TO BE FURNISHED BY USER
2 - OPERATING HEAD MAY BE REASSEMBLED 90° FROM POSITION SHOWN

THIS DRAWING COVERS A PROPRIETARY ITEM AND IS THE PROPERTY OF MICRO SWITCH, A DIVISION OF MINNEAPOLIS-HONEYWELL REGULATOR CO. THIS DRAWING IS NOT TO BE COPIED OR USED WITHOUT THE APPROVAL OF MICRO SWITCH.

CHARACTERISTICS	ELECTRICAL DATA	SCALE 1/2 TO 1
OPERATING FORCE - - - - - 3 1/2 LB MAX	CONTACT ARRANGEMENT (SEE CIRCUIT DIAGRAM)	DO NOT SCALE PRINT
RELEASE FORCE - - - - - - - - 1 LB MIN	10A-120, 240, OR 480 VAC, 1/3 HP-120 VAC 3/4 HP-240 VAC; 0.8 A-115 VDC; 0.4 A-230 VDC 0.1 A-550 VDC PILOT DUTY: 600 VAC MAX	UNLESS OTHERWISE NOTED DIMENSIONS ARE IN INCHES TOLERANCES ARE: ONE PLACE (.0) ±.030 TWO PLACE (.00) ±.015 THREE PLACE (.000) ±.005 ANGLES ±
DIFFERENTIAL TRAVEL - - - - - .020 MAX		
OVERTRAVEL - - - - - - - - - .219 MIN		
RELEASE TRAVEL - - - - - - - - .015 MIN		
SWITCH-BASIC REPLACEMENT - - - - - 2 MNI		WEIGHT

REVISIONS	
A	CO50952
3	CJH JUN 83
B	CO 53005-D
1	CJH AUG 84
C	CO 65814-E
26	GRT NOV 90
D	CO-77031
22	JDB DEC 93

ISSUE	DRAWING NUMBER	RELEASE NO.	REPLACES
8	5	PR-561	5LS8

DRAWN	CHECK	CHECK	CHECK	CHECK
OMW 10 APR 69	DCS 10 APR 69			

FO-50378-003

Downloaded from Elcodis.com electronic components distributor