PD - 94767A

International
IOR Rectifier

IRFZ44NPbF

HEXFET® Power MOSFET

- Advanced Process Technology
- Ultra Low On-Resistance
- Dynamic dv/dt Rating
- 175°C Operating Temperature
- Fast Switching
- Fully Avalanche Rated
- Lead-Free

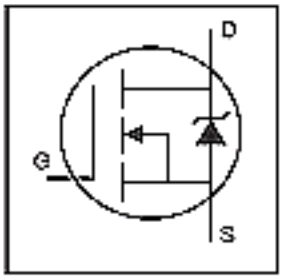

V_{DSS} = 55V

$R_{DS(on)}$ = 17.5mΩ

I_D = 49A

Description

Advanced HEXFET® Power MOSFETs from International Rectifier utilize advanced processing techniques to achieve extremely low on-resistance per silicon area. This benefit, combined with the fast switching speed and ruggedized device design that HEXFET power MOSFETs are well known for, provides the designer with an extremely efficient and reliable device for use in a wide variety of applications.

The TO-220 package is universally preferred for all commercial-industrial applications at power dissipation levels to approximately 50 watts. The low thermal resistance and low package cost of the TO-220 contribute to its wide acceptance throughout the industry.

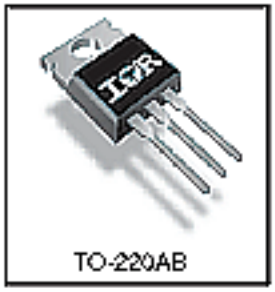

TO-220AB

Absolute Maximum Ratings

	Parameter	Max.	Units
I_D @ T_C = 25°C	Continuous Drain Current, V_{GS} @ 10V	49	A
I_D @ T_C = 100°C	Continuous Drain Current, V_{GS} @ 10V	35	
I_{DM}	Pulsed Drain Current ①	160	
P_D @T_C = 25°C	Power Dissipation	94	W
	Linear Derating Factor	0.63	W/°C
V_{GS}	Gate-to-Source Voltage	± 20	V
I_{AR}	Avalanche Current①	25	A
E_{AR}	Repetitive Avalanche Energy①	9.4	mJ
dv/dt	Peak Diode Recovery dv/dt ③	5.0	V/ns
T_J T_{STG}	Operating Junction and Storage Temperature Range	-55 to + 175	°C
	Soldering Temperature, for 10 seconds	300 (1.6mm from case)	
	Mounting torque, 6-32 or M3 srew	10 lbf•in (1.1N•m)	

Thermal Resistance

	Parameter	Typ.	Max.	Units
$R_{\theta JC}$	Junction-to-Case	—	1.5	°C/W
$R_{\theta CS}$	Case-to-Sink, Flat, Greased Surface	0.50	—	
$R_{\theta JA}$	Junction-to-Ambient	—	62	

Downloaded from Elcodis.com electronic components distributor

Electrical Characteristics @ T_J = 25°C (unless otherwise specified)

	Parameter	Min.	Typ.	Max.	Units	Conditions
$V_{(BR)DSS}$	Drain-to-Source Breakdown Voltage	55	—	—	V	V_{GS} = 0V, I_D = 250μA
$\Delta V_{(BR)DSS}/\Delta T_J$	Breakdown Voltage Temp. Coefficient	—	0.058	—	V/°C	Reference to 25°C, I_D = 1mA
$R_{DS(on)}$	Static Drain-to-Source On-Resistance	—	—	17.5	mΩ	V_{GS} = 10V, I_D = 25A ④
$V_{GS(th)}$	Gate Threshold Voltage	2.0	—	4.0	V	V_{DS} = V_{GS}, I_D = 250μA
g_{fs}	Forward Transconductance	19	—	—	S	V_{DS} = 25V, I_D = 25A⑥
I_{DSS}	Drain-to-Source Leakage Current	—	—	25	μA	V_{DS} = 55V, V_{GS} = 0V
		—	—	250		V_{DS} = 44V, V_{GS} = 0V, T_J = 150°C
I_{GSS}	Gate-to-Source Forward Leakage	—	—	100	nA	V_{GS} = 20V
	Gate-to-Source Reverse Leakage	—	—	-100		V_{GS} = -20V
Q_g	Total Gate Charge	—	—	63	nC	I_D = 25A
Q_{gs}	Gate-to-Source Charge	—	—	14		V_{DS} = 44V
Q_{gd}	Gate-to-Drain ("Miller") Charge	—	—	23		V_{GS} = 10V, See Fig. 6 and 13
$t_{d(on)}$	Turn-On Delay Time	—	12	—	ns	V_{DD} = 28V
t_r	Rise Time	—	60	—		I_D = 25A
$t_{d(off)}$	Turn-Off Delay Time	—	44	—		R_G = 12Ω
t_f	Fall Time	—	45	—		V_{GS} = 10V, See Fig. 10 ④
L_D	Internal Drain Inductance	—	4.5	—	nH	Between lead, 6mm (0.25in.) from package and center of die contact
L_S	Internal Source Inductance	—	7.5	—		
C_{iss}	Input Capacitance	—	1470	—	pF	V_{GS} = 0V
C_{oss}	Output Capacitance	—	360	—		V_{DS} = 25V
C_{rss}	Reverse Transfer Capacitance	—	88	—		f = 1.0MHz, See Fig. 5
E_{AS}	Single Pulse Avalanche Energy②	—	530③	150⑤	mJ	I_{AS} = 25A, L = 0.47mH

Source-Drain Ratings and Characteristics

	Parameter	Min.	Typ.	Max.	Units	Conditions
I_S	Continuous Source Current (Body Diode)	—	—	49	A	MOSFET symbol showing the integral reverse p-n junction diode.
I_{SM}	Pulsed Source Current (Body Diode)①	—	—	160		
V_{SD}	Diode Forward Voltage	—	—	1.3	V	T_J = 25°C, I_S = 25A, V_{GS} = 0V ④
t_{rr}	Reverse Recovery Time	—	63	95	ns	T_J = 25°C, I_F = 25A
Q_{rr}	Reverse Recovery Charge	—	170	260	nC	di/dt = 100A/μs ④
t_{on}	Forward Turn-On Time	Intrinsic turn-on time is negligible (turn-on is dominated by L_S+L_D)				

Notes:

① Repetitive rating; pulse width limited by max. junction temperature. (See fig. 11)

② Starting T_J = 25°C, L = 0.48mH R_G = 25Ω, I_{AS} = 25A. (See Figure 12)

③ I_{SD} ≤ 25A, di/dt ≤ 230A/μs, V_{DD} ≤ $V_{(BR)DSS}$, T_J ≤ 175°C

④ Pulse width ≤ 400μs; duty cycle ≤ 2%.

⑤ This is a typical value at device destruction and represents operation outside rated limits.

⑥ This is a calculated value limited to T_J = 175°C .

Downloaded from Elcodis.com electronic components distributor

TO-220AB Package Outline (Dimensions are shown in millimeters (inches))

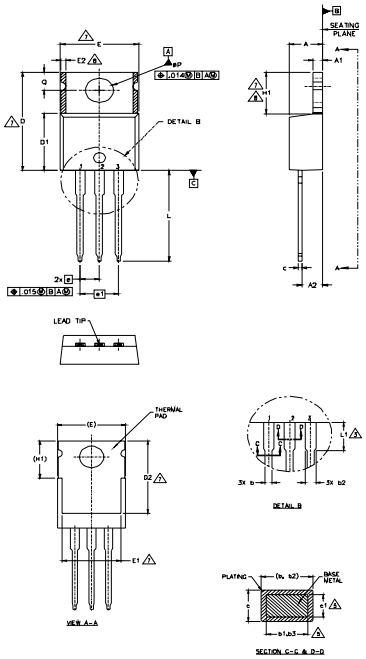

NOTES:

1.– DIMENSIONING AND TOLERANCING AS PER ASME Y14.5 M– 1994.
2.– DIMENSIONS ARE SHOWN IN INCHES [MILLIMETERS].
3.– LEAD DIMENSION AND FINISH UNCONTROLLED IN L1.
4.– DIMENSION D, D1 & E DO NOT INCLUDE MOLD FLASH. MOLD FLASH SHALL NOT EXCEED .005" (0.127) PER SIDE. THESE DIMENSIONS ARE MEASURED AT THE OUTERMOST EXTREMES OF THE PLASTIC BODY.
5.– DIMENSION b1, b3 & c1 APPLY TO BASE METAL ONLY.
6.– CONTROLLING DIMENSION : INCHES.
7.– THERMAL PAD CONTOUR OPTIONAL WITHIN DIMENSIONS E,H1,D2 & E1
8.– DIMENSION E2 X H1 DEFINE A ZONE WHERE STAMPING AND SINGULATION IRREGULARITIES ARE ALLOWED.
9.– OUTLINE CONFORMS TO JEDEC TO-220, EXCEPT A2 (max.) AND D2 (min.) WHERE DIMENSIONS ARE DERIVED FROM THE ACTUAL PACKAGE OUTLINE.

SYMBOL	DIMENSIONS				NOTES
	MILLIMETERS		INCHES		
	MIN.	MAX.	MIN.	MAX.	
A	3.56	4.83	.140	.190	
A1	0.51	1.40	.020	.055	
A2	2.03	2.92	.080	.115	
b	0.38	1.01	.015	.040	
b1	0.38	0.97	.015	.038	5
b2	1.14	1.78	.045	.070	
b3	1.14	1.73	.045	.068	5
c	0.36	0.61	.014	.024	
c1	0.36	0.56	.014	.022	5
D	14.22	16.51	.560	.650	4
D1	8.38	9.02	.330	.355	
D2	11.68	12.88	.460	.507	7
E	9.65	10.67	.380	.420	4,7
E1	6.86	8.89	.270	.350	7
E2	–	0.76	–	.030	8
e	2.54 BSC		.100 BSC		
e1	5.08 BSC		.200 BSC		
H1	5.84	6.86	.230	.270	7,8
L	12.70	14.73	.500	.580	
L1	–	6.35	–	.250	3
øP	3.54	4.08	.139	.161	
Q	2.54	3.42	.100	.135	

LEAD ASSIGNMENTS

HEXFET
1.– GATE
2.– DRAIN
3.– SOURCE

IGBTs, CoPACK
1.– GATE
2.– COLLECTOR
3.– EMITTER

DIODES
1.– ANODE/OPEN
2 – CATHODE
3.– ANODE

TO-220AB Part Marking Information

EXAMPLE: THIS IS AN IRF1010
LOT CODE 1789
ASSEMBLED ON WW 19, 2000
IN THE ASSEMBLY LINE "C"

Note: "P" in assembly line position indicates "Lead - Free"

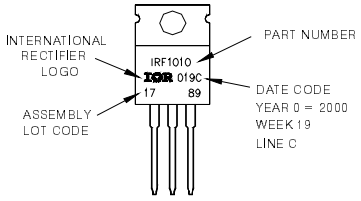

Data and specifications subject to change without notice.
This product has been designed and qualified for the Industrial market.

International
IOR Rectifier

Downloaded from Elcodis.com electronic components distributor