REV.	DATE	DESCRIPTION
A	02/22/01	REVISE PLATING / UPDATE DRAWING

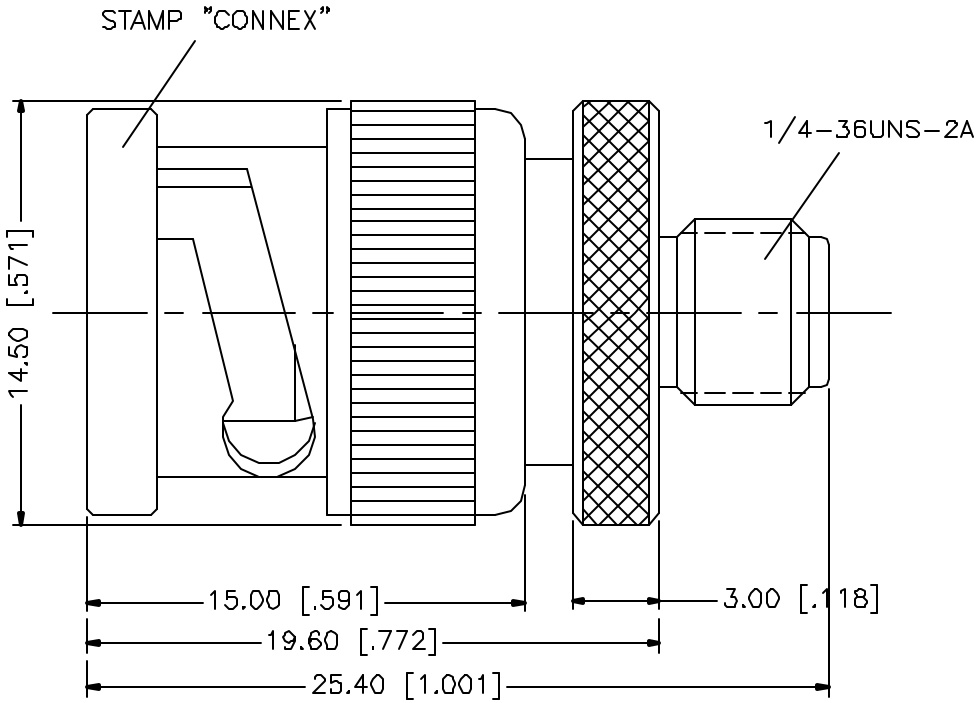

8			
7			
6			
5			
4			
3	CONTACT PIN	PHOS. BRONZE	GOLD
2	INSULATOR	TEFLON	NATURAL
1	BODY	BRASS	GOLD
	DESCRIPTION	MATERIAL	FINISH

UNLESS OTHERWISE SPECIFIED DIMENSIONS ARE IN MILLIMETERS

DIMENSIONS IN [ ] ARE IN INCHES FOR CUSTOMER REFERANCE ONLY

UNLESS OTHERWISE SPECIFIED TOLERANCES FOR MILLIMETERS ARE:

0.5-6 = ± 0.2
6-30 = ± 0.4
30-120 = ± 0.6
120-315 = ± 1
315-1000 = ± 1.6
1000-2000 = ± 2.4

DO NOT SCALE DRAWING

APPROVALS		DATE
DRAWN	G.R.S.	02/22/01
CHECKED		
ISSUED		

Connector Corporation

TITLE: SMA FEMALE TO BNC MALE ADAPTOR

SIZE	FSCM NO.	DWG. NO.	REV.
A	99001	242103.DWG	A

SCALE	NA	PART NO.	242103	SHEET	1 OF 1