SHEET OF

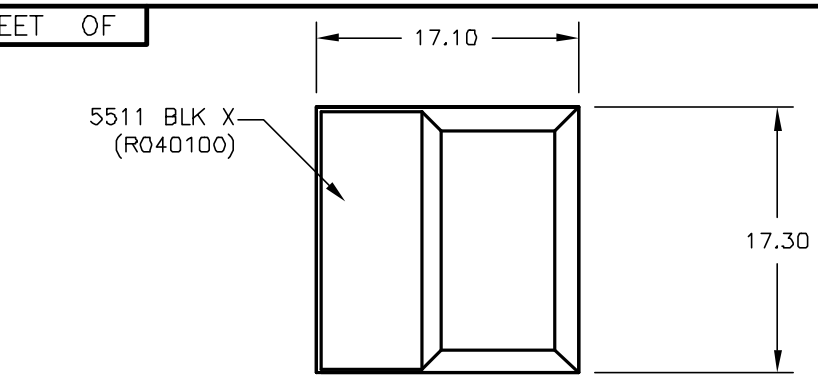


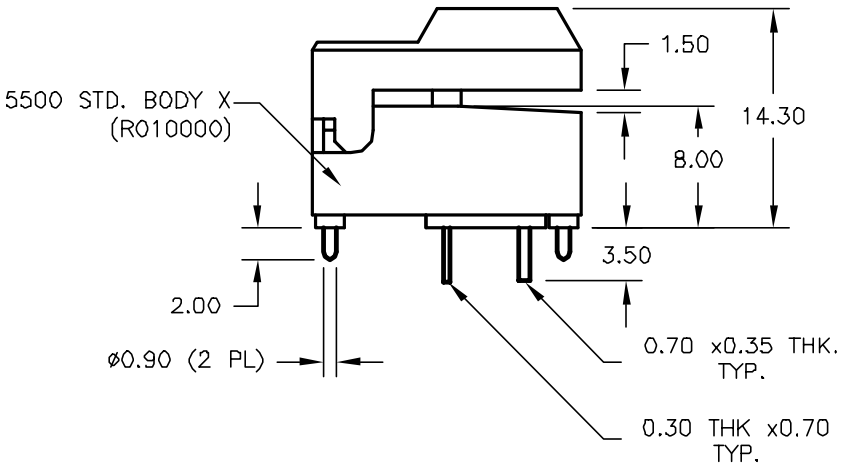


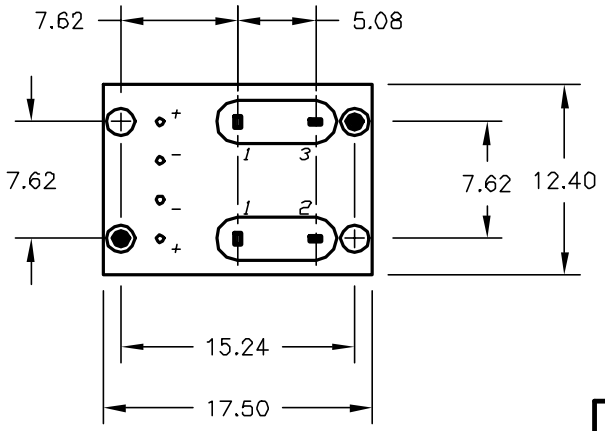


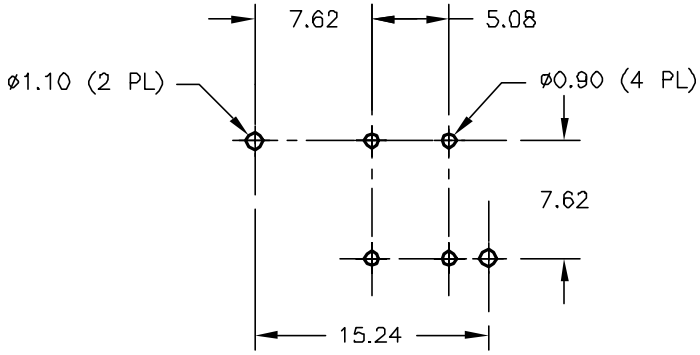


RECOMMENDED P.C.B LAYOUT

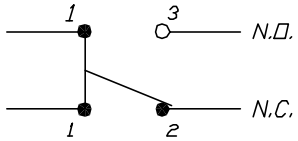


CIRCUIT: SPDT
CONTACT CONFIGURATION

NOTES:

1. ALL DIMENSIONS IN MM
2. GENERAL TOLERANCE: X.X=±0.4
   X.XX=±0.25
3. TERM. NO. FOR REF. ONLY
4. RATING: 12mA 24V
5. OPERATING FORCE: <200gf
6. OPERATING TRAVEL 2.5±0.2mm

| REV. | ECN No. | DESCRIPTION | DATE | CHKD |
|---|---|---|---|---|
| A | 11925 | RELEASED FOR PRODUCTION | 2/13/02 | CJB |

THE INFORMATION CONTAINED IN THIS DOCUMENT IS PROPRIETARY TO E-SWITCH AND IS NOT TO BE COPIED OR TRANSFERRED

E-SWITCH®

TITLE 5511 M-1-X

| SCALE | DATE | DR | DWG | REV |
|---|---|---|---|---|
| 2:1 | 2/13/02 | CJB | XR0150P | A |

Downloaded from Elcodis.com electronic components distributor