Rating	3A 125V, 1.5A 250V AC
Contact Resistance	50m ohm max.
Insulation Resistance	DC 500V 100M ohm min.
Dielectric Strength	AC 1500V 1 minute
Operating Temperature	-20°C ~ 85°C

BASE COLOR: Black

BUTTON COLOR: Red

Mounting Hole

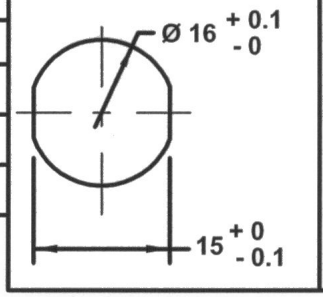

Cut-Out 7mm thk. max.

Circuit Diagram

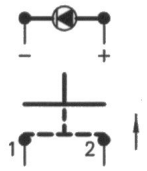

SPST OFF - (ON) (LED)

( )= Momentary

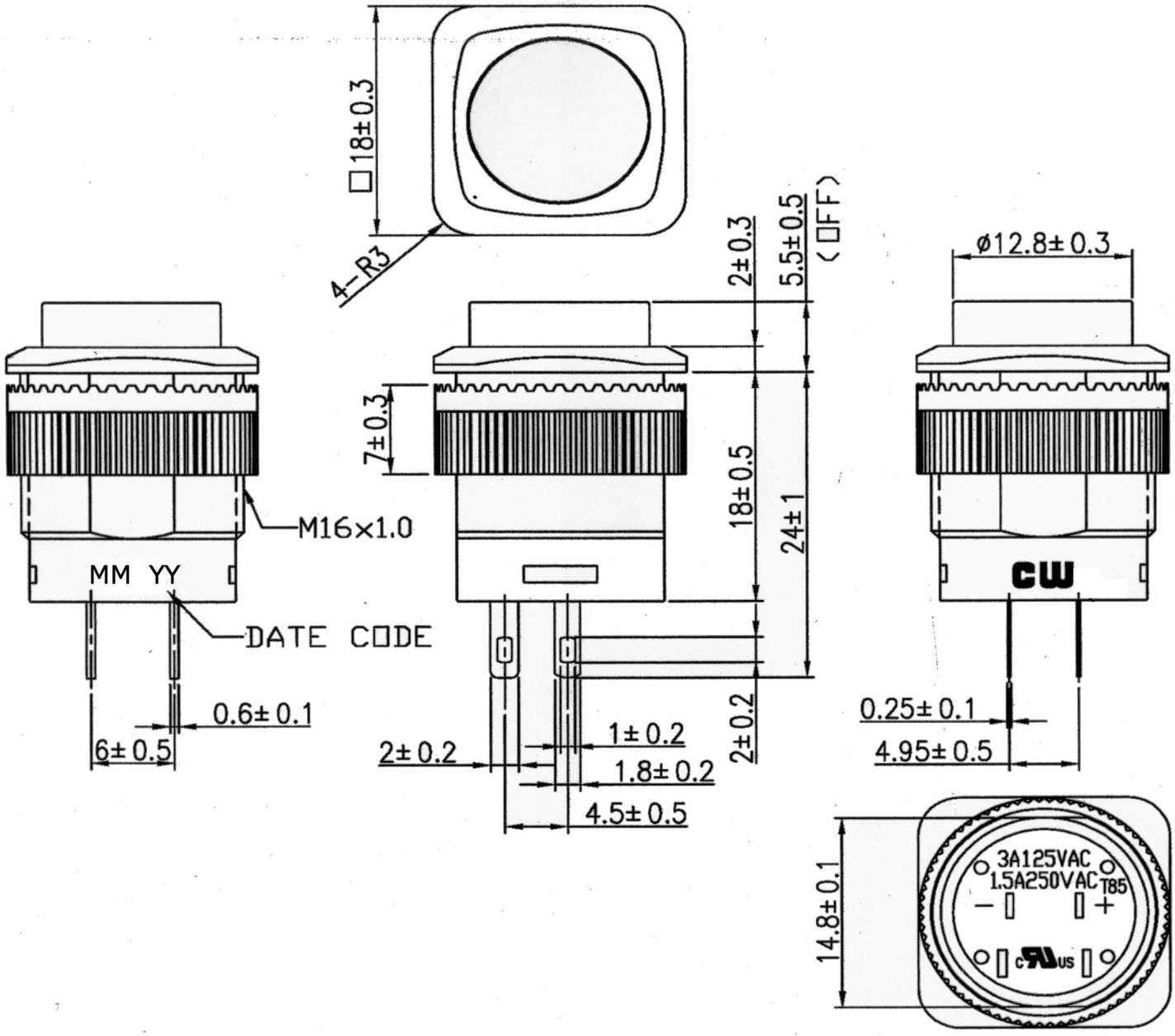

RoHS Compliant

CW INDUSTRIES
Southampton, Pa. 18966
Tel 215.355.7080/www.cwind.com

Date Drawn: 12/24/09	Rev. 0	Unit: mm	Checked By: G. Guld
Title: PUSH BUTTON SWITCH		CW P/N: GPB508AL05BR	

THIS INFORMATION IS CONFIDENTIAL AND PROPRIETARY TO CW INDUSTRIES INCORPORATED AND ITS AFFILIATES. IT MAY NOT BE DISCLOSED TO ANYONE, OTHER THAN CW INDUSTRIES PERSONNEL, WITHOUT WRITTEN AUTHORIZATION FROM CW INDUSTRIES INCORPORATED, SOUTHAMPTON, PENNSYLVANIA USA.

Downloaded from Elcodis.com electronic components distributor