THIS COPY IS PROVIDED ON A RESTRICTED BASIS AND IS NOT TO BE USED IN ANY WAY DETRIMENTAL TO THE INTERESTS OF PANDUIT CORP.

NOTES:
1. DIMENSIONS IN [ ] ARE IN MILLIMETERS.

PANDUIT PART NO.	FACE COLOR	PKG. QTY.	THICKNESS	PRODUCT TYPE
C100X050APT	WHITE	500	.030 +/-.010	POLYESTER/ FOAM COMPONENT LABEL
C100X050AOT	BLACK	500	.030 +/-.010	POLYESTER/ FOAM COMPONENT LABEL
C100X050AST	GREEN	500	.030 +/-.010	POLYESTER/ FOAM COMPONENT LABEL
C100X050AWT	RED	500	.030 +/-.010	POLYESTER/ FOAM COMPONENT LABEL
C100X050A8T	YELLOW	500	.030 +/-.010	POLYESTER/ FOAM COMPONENT LABEL
C100X050AMT	SILVER	500	.030 +/-.010	POLYESTER/ FOAM COMPONENT LABEL

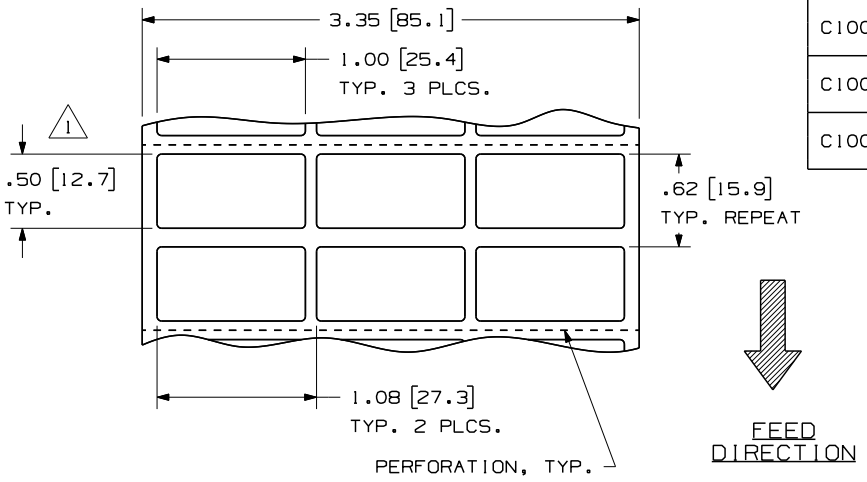

CAD FILENAME/LAYERS: 100491BP_DC_C10729/01B

PANDUIT CORP. TINLEY PARK, ILLINOIS

CUSTOMER DRAWING
RAISED PANEL COMPONENTS LABELS
C100X050APT

UNLESS OTHERWISE SPECIFIED, DIMENSIONAL TOLERANCES ARE:
(.X) ± .1 (.XXX) ± .025
(.XX) ± .050 ANGLES ± 5°

UNLESS OTHERWISE SPECIFIED, ALL DIMENSIONS ARE GIVEN IN INCHES, THIRD ANGLE PROJECTION.

REV	DATE	BY	CHK	DESCRIPTION	ECN	-	R	CUST	SUP
1	12/18/08	RVU		REMOVE "REPEAT" FROM THE LABEL SIZE.	5592		R		
0	9/5/08	RVU	PTR	DRAWING RELEASE.	5537		R		

DRAWN BY: RVU
DATE: 9/5/08
CHK'D: SCWE
MAT'L: GMH3 POLYESTER & FOAM
SCALE: NTS
DRAWING NO.: C10729
DWG SIZE: A

Downloaded from Elcodis.com electronic components distributor