THIS DRAWING IS UNCONTROLLED	RELEASED FOR PUBLICATION	26

© COPYRIGHT 26 BY TYCO ELECTRONICS CORPORATION. ALL RIGHTS RESERVED.

CHK	REV
HM	00

REVISIONS

P	LTR	DESCRIPTION	DATE	DWN	APVD
	A	RLSD: ECR-04-000282	06JAN2005	GG	SH
	B	ECR 05-003024	07JUL2005	JM	SH

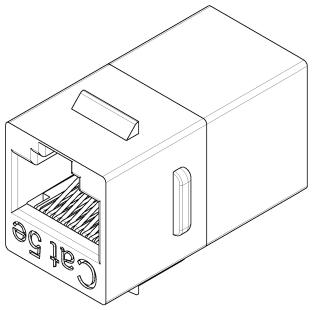

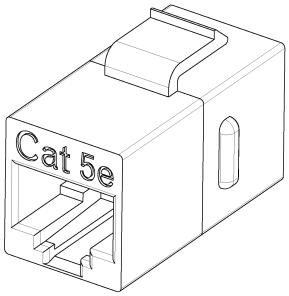

1. ALL DIMENSIONS SHOWN ARE NOMINAL UNLESS OTHERWISE SPECIFIED.

2. MATERIAL:
HOUSING - POLYPHENYLENE OXIDE, BLACK.
TERMINAL - .018[0.46] DIA PHOSPHOR BRONZE PLATED WITH .000050 [.00127] MINIMUM THICK GOLD OVER .000100 [.00254] MINIMUM THICK NICKEL.

3. MOUNTING PANEL THICKNESS .062 [1.57] NOMINAL.

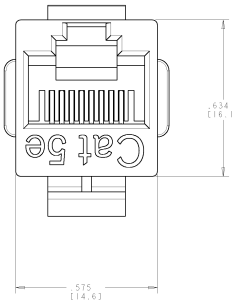

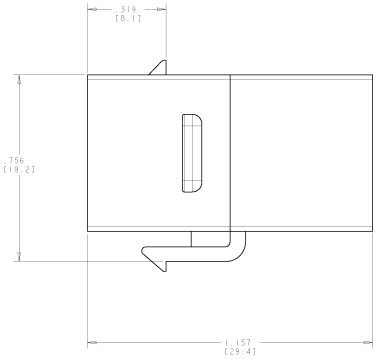

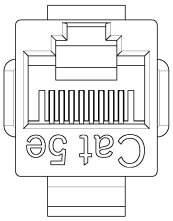

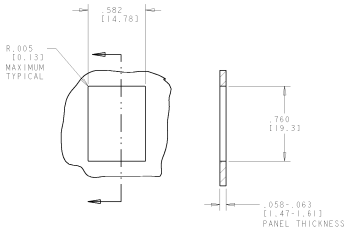

SINGLE PANEL CUTOUT

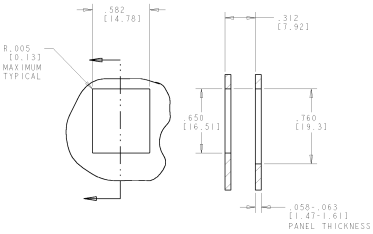

SUGGESTED FLUSH MOUNT
PANEL APPLICATION CUTOUT

1479289-2
PART NUMBER

THIS DRAWING IS OWNED BY TYCO ELECTRONICS CORPORATION AND SHALL NOT BE REPRODUCED OR DISCLOSED WITHOUT WRITTEN PERMISSION.

DWN	06JAN05	GG GARRETT
CHK	06JAN05	HM HERNDON
APVD	06JAN05	SH HERNDON

DIMENSIONS: INCHES [MM]

TOLERANCES UNLESS OTHERWISE SPECIFIED:
± PLC
± PLC
± PLC
± PLC
± ANGLE

MATERIAL: -

FINISH: -

PRODUCT SPEC: -

APPLICATION SPEC: -

WEIGHT: -

tyco Electronics
Tyco Electronics
Harrisburg, PA 17105-3608

NAME: COUPLER, IN-LINE, CAT5E, BLACK, UNSHIELDED

SIZE: A | CAGE CODE: | DRAWING NO: 00779©-1479289 | RESTRICTED TO: -

CUSTOMER DRAWING | SCALE: 2:1 | SHEET 1 OF 1 | REV: B

AMP 40015 REV 31MAR2000

Pro/ENGINEER DRAWING

Downloaded from Elcodis.com electronic components distributor