Downloaded from Elcodis.com electronic components distributor

PART NO.	NO. OF POSITION	LOADED POSITION	CONTACTS PLATING
74591-088	8	ALL	30u" GXT
74591-088LF			
74591-388			30u" AU
74591-388LF			
74591-588			50u" AU
74591-588LF			

LEAD FREE PRODUCT NO.

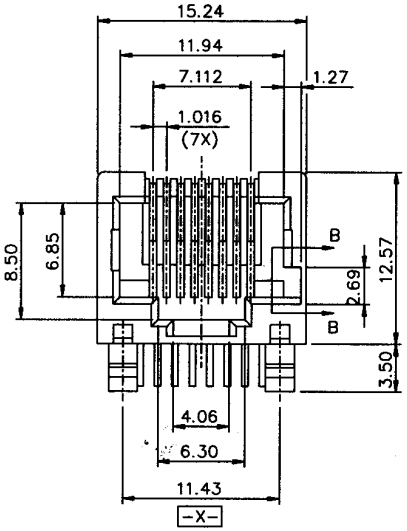

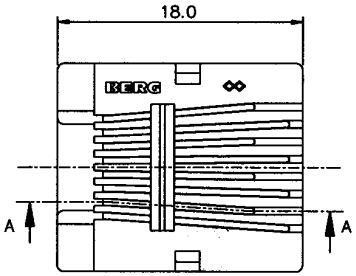

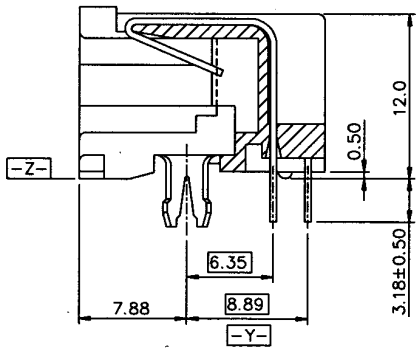

SEC. A-A

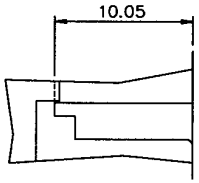

SCETION B-B

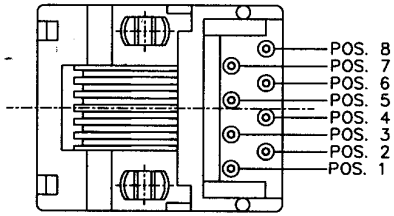

NOTES:

1. RECOMMENDED PCB THICKNESS 1.6mm.
2. HOUSING MAT'L: NYLON 66, 25% GLASS REINFORCED, UL 94V-0, COLOR BLACK.
3. CONTACTS: PHOSPHOR BRONZE ALLOY UNS-C51000, ø0.46 ROUND WIRE. PLATING: SEE TABLE.
4. PROTRUDED SHELF ONLY APPEARS ON 8 POS. JACK.
5. PACKAGING SPEC.: GES-14-361(USE TUBE).
6. THIS PRODUCT MEETS EUROPEAN UNION DIRECTIVES AND OTHER COUNTRY REGULATIONS AS DESCRIBED IN GS-22-008.
7. THE HOUSING WILL WITHSTAND EXPOSURE TO 260°C PEAK TEMPERATURE FOR 10 SECONDS IN A WAVE SOLDER APPLICATION WITH A 1.60mm MINIMUM THICK CIRCUIT BOARD.
8. IF LF P/N PACKAGING MEETS GS-14-920 SPECIFICATION.

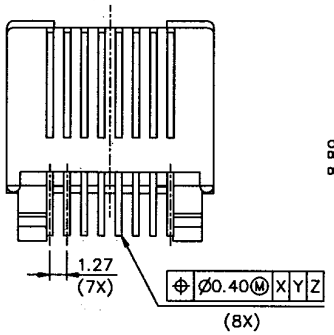

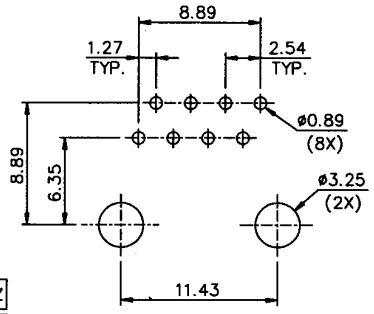

RECOMMENDED PCB LAYOUT
COMPONENT SIDE

mat'l code				tolerance unless otherwise specified			CUSTOMER COPY	FCI Electronics www.fciconnect.com	
rev.	ecn no.	dr	date	linear	.0 ± 0.25		projection	title	MODIFIED LOW PROFILE PCB III HORZ MOD JACK, FOR 1.6MM P.C.B. WITHOUT PANEL STOP, KEYED
A	N05-0018	YS	01/25/05		.00 ± 0.13				
					.000± 0.05				
				angles	± 2°				
				dr	CATHY LIN	04/13/98	unit mm/inch	product family MOD JACK	code TWN
				engr	TONY CHIEN	04/13/98		size A3	dwg no. 74591
				chr	TONY CHIEN	04/13/98	scale 3 : 1		sheet 1 OF 1
				appd	JENN TSAO	04/13/98			
sheet	revision	A							
index	sheet	1							

Tous droits strictement reservés. Reproduction ou communication a des tiers int sous quelque forme que ce soit sans autorisation ecrite du propietaire. Propriete de c FCI ELECTRONICS. Droits de reproduction FCI ELECTRONICS bv

All rights strictly reserved. Reproduction or issue to third parties in any for whatever is not permitted without written authority from the proprietor. Property of c FCI ELECTRONICS. Copyright FCI ELECTRONICS bv

PDM: Rev:A STATUS:Released Printed: Mar 10, 2007

PDM: Rev:A STATUS:Released Printed: Aug 01, 2010