THIS DRAWING IS UNPUBLISHED. RELEASED FOR PUBLICATION -.- .
© COPYRIGHT 2005 By - ALL RIGHTS RESERVED.

LOC	DIST
AJ	16

REVISIONS

P	LTR	DESCRIPTION	DATE	DWN	APVD
	L2	REVISED PER ECO-11-005030	11MAR11	RK	HMR

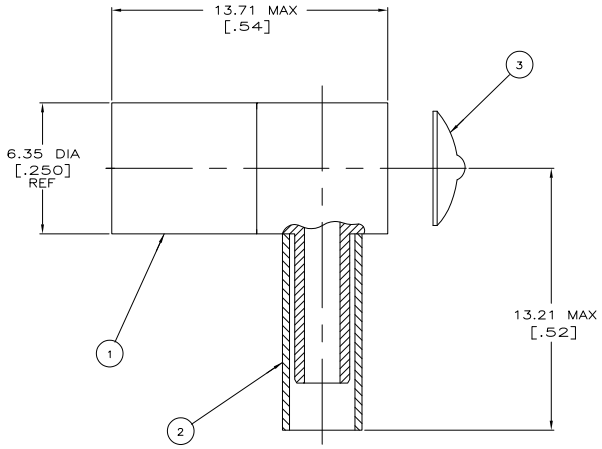

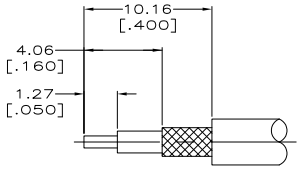

RECOMMENDED STRIP LENGTHS
SCALE NTS

1. INTERFACE PER MIL-C-39012.
2. SEE INSTRUCTION SHEET 408-2987-9.
3. USES SCREW MACHINED CONTACT.
4. OBSOLETE PARTS: OBSOLETE CIS STREAMLINING PER D.RENAUD/D.SINISI

	POSITION LETTER	AMP DIE SET	HEX SIZE	DANIELS DIE SET	(3) END CAP QTY=1	(2) FERRULE QTY=1	(1) PLUG ASSY QTY=1	CABLE	PART NO
	PRO-CRIMPER FOR BRAID CRIMP		M 22520/5-01 FOR BRAID CRIMP						
	TOOLING INFORMATION								
OBSOLETE	C	58483-1	.151	HX4-1637	414013-3	1-413889-4	414364-6	RG 174,188,316(ALL DBL SHIELDED)	3 1-414363-4
OBSOLETE	C	58483-1	.151	HX4-1637	414013-3	1-413889-4	414364-1	RG 174,188,316(ALL DBL SHIELDED)	1-414363-2
4 OBSOLETE	C	58483-1	.151	HX4-1637	414013-3	1-413889-4	414364-1	RG 174,188,316(ALL DBL SHIELDED)	~~1-414363-1~~
OBSOLETE	A	58483-1	.105	HX4-1637	414013-3	1-413889-5	414364-4	RG 178,196	414363-9
	A	58483-1	.105	HX4-1637	414013-3	1-413889-5	414364-3	RG 178,196	414363-8
OBSOLETE	C	58483-1	.151	HX4-1637	414013-3	1-413889-4	414364-2	RG 174,188,316(ALL DBL SHIELDED)	414363-6
	B	58483-1	.128	HX4-1637	414013-3	1-413889-3	414364-2	RG 174,188,316	414363-5
	C	58483-1	.151	HX4-1637	414013-3	1-413889-4	414364-1	RG 174,188,316(ALL DBL SHIELDED)	414363-4
	B	58483-1	.128	HX4-1637	414013-3	1-413889-3	414364-1	RG 174,188,316	414363-3

THIS DRAWING IS A CONTROLLED DOCUMENT.

DIMENSIONS: MM [INCHES]

TOLERANCES UNLESS OTHERWISE SPECIFIED:
0 PLC ± -
1 PLC ± -
2 PLC ± 0.25 [.010]
3 PLC ± 0.130 [.005]
4 PLC ± -
ANGLES ± -

MATERIAL -
FINISH -

DWN B. MOYER 19JUN92
CHK J. FLANAGAN 25JUN92
APVD -
PRODUCT SPEC -
APPLICATION SPEC -
WEIGHT -

TE Connectivity

NAME PLUG,RTANG CRIMP,HEX CRIMP,SMB

SIZE A2 | CAGE CODE 00779 | DRAWING NO C-414363 | RESTRICTED TO -

CUSTOMER DRAWING | SCALE 8:1 | SHEET 1 OF 1 | REV L2

1471-9 (3/11)

Downloaded from Elcodis.com electronic components distributor