THIS DRAWING IS UNPUBLISHED.	RELEASED FOR PUBLICATION 20
© COPYRIGHT 20 BY -	ALL RIGHTS RESERVED.

LOC	DIST
ES	00

REVISIONS

P	LTR	DESCRIPTION	DATE	DRN	APVD
	A6	REVISED PER ECO-11-005033	10MAR2011	RK	HMR

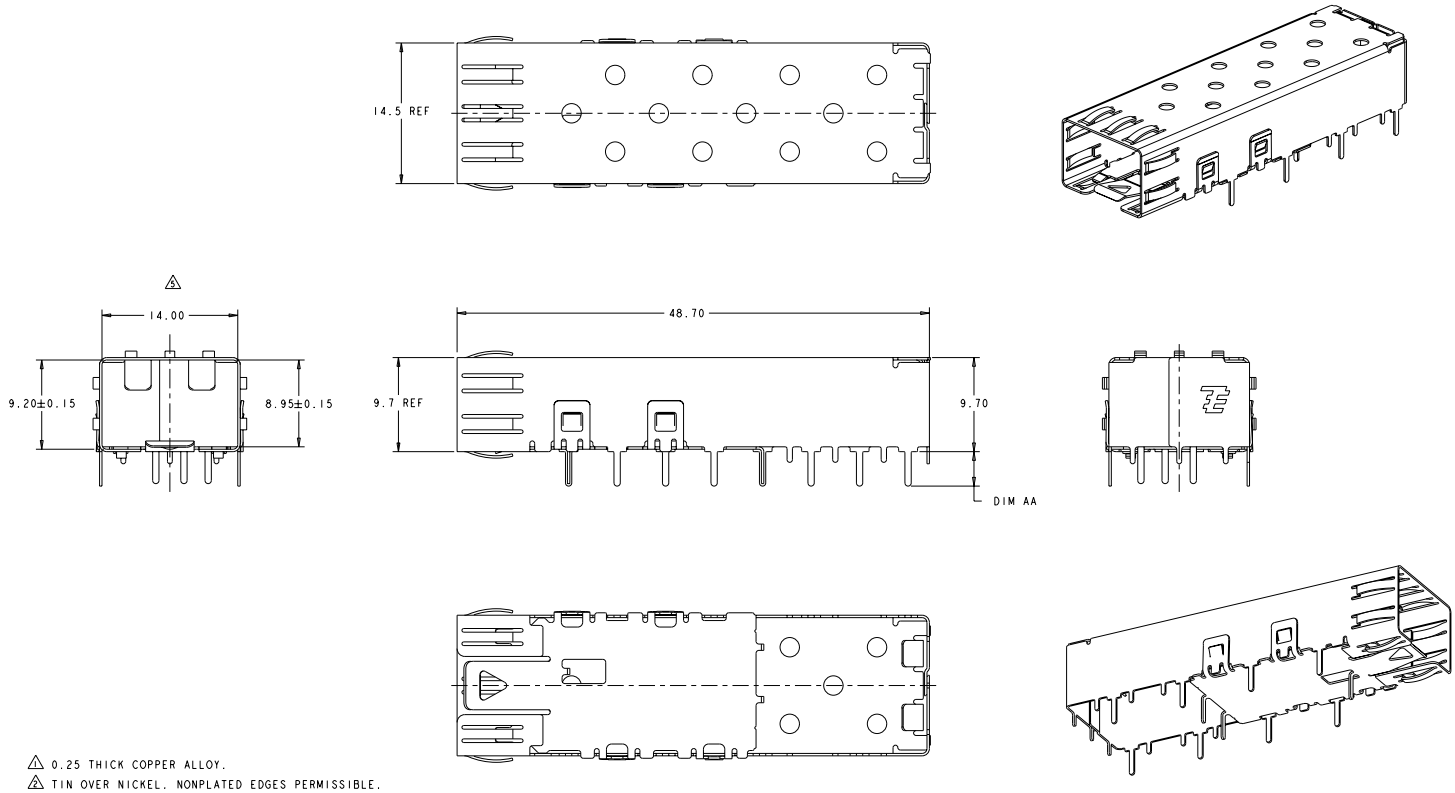

1. 0.25 THICK COPPER ALLOY.
2. TIN OVER NICKEL. NONPLATED EDGES PERMISSIBLE.
3. SFP MSA COMPATIBLE.
4. PADS AND VIAS CHASSIS GROUND.
5. DATUM AND BASIC DIMENSION ESTABLISHED BY CUSTOMER.

PACKAGING	DIM AA	PART NUMBER
TRAY	1.80	1489962-4
REEL	1.80	1489962-3
TRAY	3.55	1489962-1

THIS DRAWING IS A CONTROLLED DOCUMENT.

DIMENSIONS: MM

TOLERANCES UNLESS OTHERWISE SPECIFIED:
0 PLC ±-
1 PLC ±-
2 PLC ±0.10
3 PLC ±-
4 PLC ±-
ANGLES ±-

MATERIAL 1

FINISH 2

DRN G.GERACE 11JUL02
CHK J.KOPPENHEFFER 08JAN03
APD W.WALMSLEY 08JAN03
PRODUCT SPEC 108-1950
APPLICATION SPEC 114-13017
WEIGHT -

TE Connectivity

NAME CAGE ASSEMBLY, SOLDER PIN, SFP

SIZE A1 | CAGE CODE 00779 | DRAWING NO C-1489962 | RESTRICTED TO -

CUSTOMER DRAWING | SCALE 5:1 | SHEET 1 OF 3 | REV A6

4005 13/111

Pro/ENGINEER DRAWING

Downloaded from Elcodis.com electronic components distributor

THIS DRAWING IS UNPUBLISHED. RELEASED FOR PUBLICATION 20
© COPYRIGHT 20 BY - ALL RIGHTS RESERVED.

LOC	DIST
ES	00

REVISIONS

P	LTR	DESCRIPTION	DATE	DWN	APVD
	-	SEE SHEET 1	-	-	-

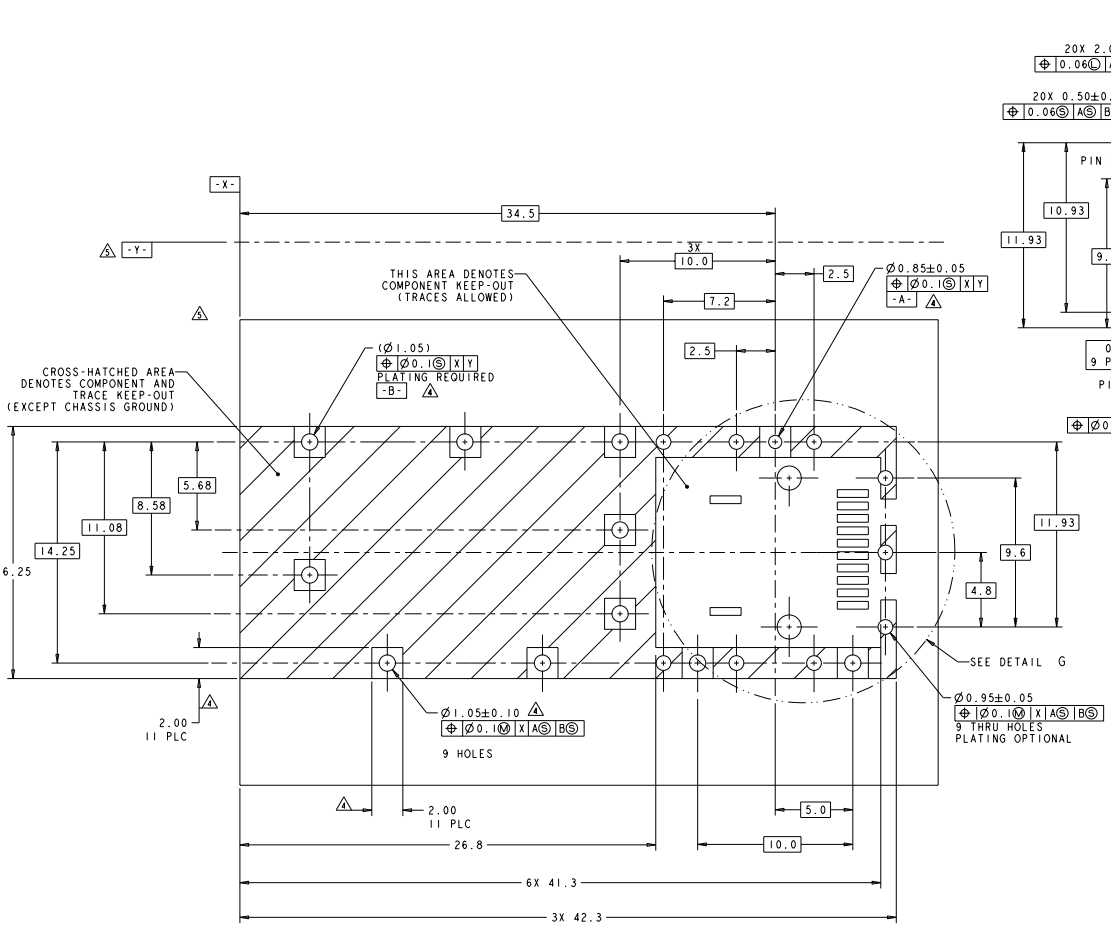

RECOMMENDED PCB LAYOUT
SCALE 8:1

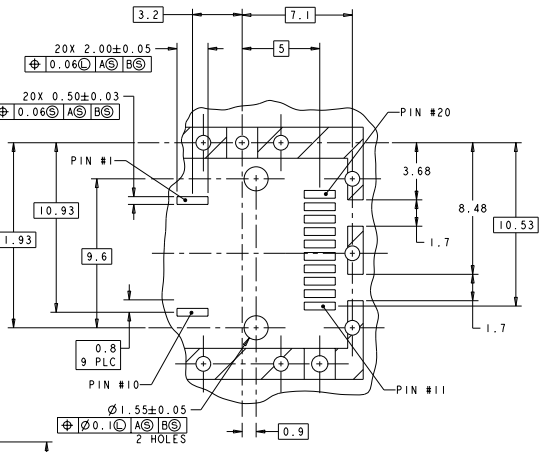

DETAIL G
SCALE 8:1

THIS DRAWING IS A CONTROLLED DOCUMENT.

DIMENSIONS: MM

TOLERANCES UNLESS OTHERWISE SPECIFIED:
0 PLC ±-
1 PLC ±-
2 PLC ±0.10
3 PLC ±-
4 PLC ±-
ANGLES ±-
FINISH -

MATERIAL -

DWN T.GERACE 11JUL02
CHK J.KOPPENHEFFER 08JAN03
APVD W.WALMSLEY 08JAN03

PRODUCT SPEC 108-1950
APPLICATION SPEC 114-13017
WEIGHT -

TE Connectivity

NAME CAGE ASSEMBLY, SOLDER PIN, SFP

SIZE A1 | CAGE CODE 00779 | DRAWING NO C-1489962 | RESTRICTED TO -

CUSTOMER DRAWING | SCALE 5:1 | SHEET 2 OF 3 | REV A6

4005 12/11

Downloaded from Elcodis.com electronic components distributor

THIS DRAWING IS UNPUBLISHED. RELEASED FOR PUBLICATION 20
© COPYRIGHT 20 BY - ALL RIGHTS RESERVED.

LOC	DIST
ES	00

REVISIONS

P	LTR	DESCRIPTION	DATE	DWN	APVD
	-	SEE SHEET 1	-	-	-

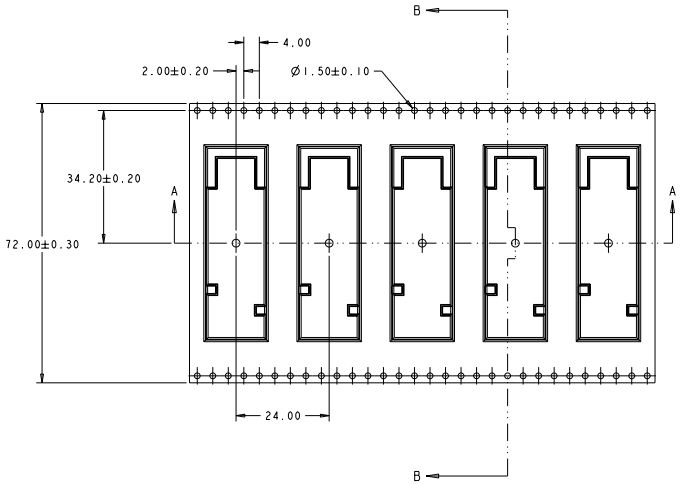

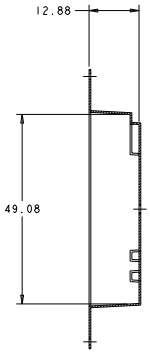

SECTION B-B

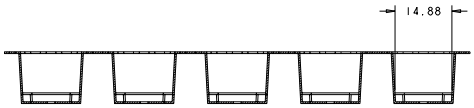

SECTION A-A

1489962-3 REEL PACKAGING

THIS DRAWING IS A CONTROLLED DOCUMENT.

DIMENSIONS: MM

TOLERANCES UNLESS OTHERWISE SPECIFIED:
0 PLC ±-
1 PLC ±X
2 PLC ±0.10
3 PLC ±-
4 PLC ±-
ANGLES ±-

MATERIAL -

FINISH -

DWN	J.GERACE	11JUL02
CHK	J.KOPPENHEFFER	08JAN03
APVD	W.WALMSLEY	08JAN03

PRODUCT SPEC 108-1950

APPLICATION SPEC 114-13017

WEIGHT -

CUSTOMER DRAWING

TE Connectivity

NAME CAGE ASSEMBLY, SOLDER PIN, SFP

SIZE	CAGE CODE	DRAWING NO	RESTRICTED TO
A1	00779	C-1489962	-

SCALE 5:1 SHEET 3 OF 3 REV A6

Downloaded from Elcodis.com electronic components distributor