SHEET OF

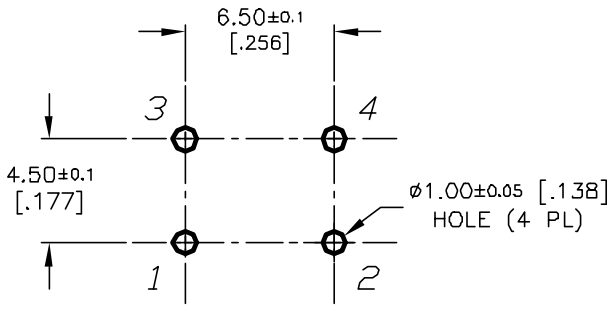

RECOMMENDED P.C.B. LAYOUT

SCALE 3:1

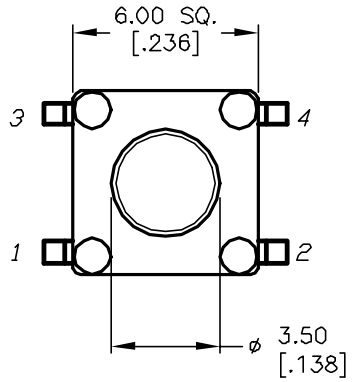

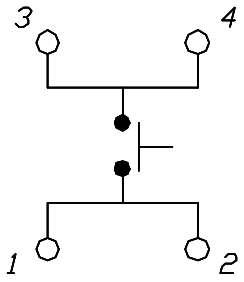

CIRCUIT: SPST

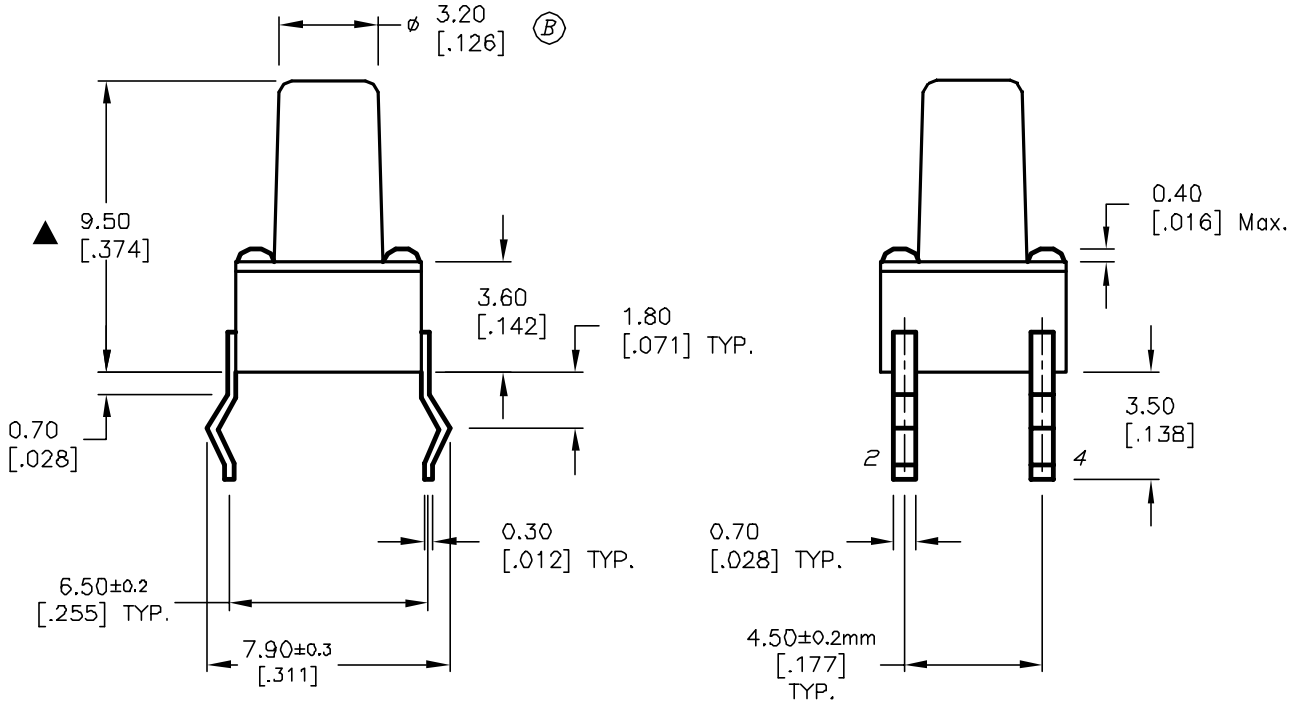

NOTES:

1. ALL DIMENSIONS IN MM [INCH]
2. GENERAL TOLERANCE: X.X=±0.4
   X.XX=±0.25
3. TERM. NOS. FOR REFERENCE ONLY.
4. RATINGS: 12VDC, 50mA
5. ▲ OPERATING FORCE: 160±50gf
6. TRAVEL: 0.25±0.1mm
7. CONTACT RESISTANCE: 100 mILLI-Ohms Max.
8. DIELECTRIC STRENGTH: 250V RMS min.
9. INSULATION RESISTANCE: 1000 Mega-Ohms min.
10. ELECTRICAL LIFE: 100,000 CYCLES min.
11. ▲ DESIGNATE MAJOR FEATURE:

REV.	ECN No.	DESCRIPTION	DATE	CHKD
B	12190	ADD TAPER	5/28/02	CJB
A	11621	RELEASED FOR PRODUCTION	8/20/01	CJB

THE INFORMATION CONTAINED IN THIS DOCUMENT IS PROPRIETARY TO E-SWITCH AND IS NOT TO BE COPIED OR TRANSFERRED

E-SWITCH®

TITLE: TL1105B F160 Q

SCALE	DATE	DR	DWG	REV
4:1	8/20/01	CJB	D310003	B

Downloaded from Elcodis.com electronic components distributor