THIS DRAWING IS UNPUBLISHED. RELEASED FOR PUBLICATION -.-.-
© COPYRIGHT - By - ALL RIGHTS RESERVED

UOC	DIST
AD	00

REVISIONS

P	LTR	DESCRIPTION	DATE	DWN	APVD
	C4	REVISED PER ECO-11-004587	11MAR11	RK	HMR

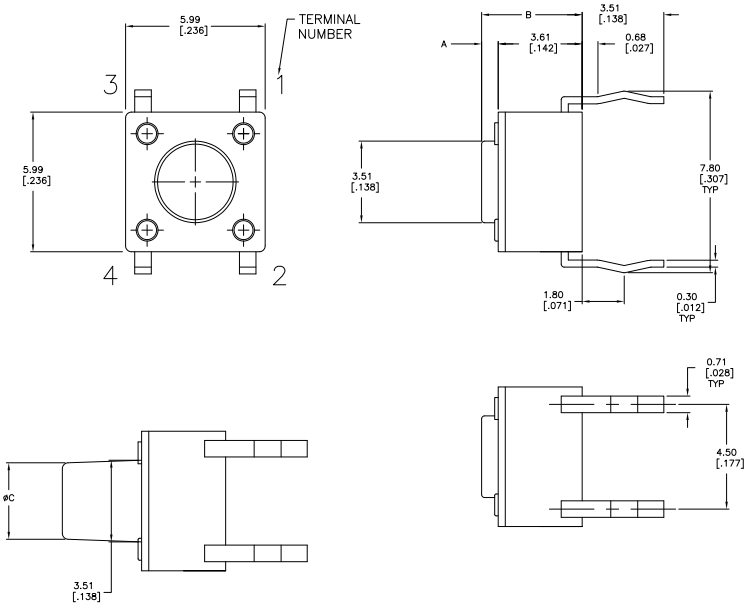

VIEW A–A
FSM6J THRU FSM18J

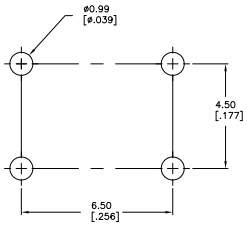

RECOMMENDED HOLE LAYOUT
TOLERANCE ±0.05[.002] UNLESS
OTHERWISE NOTED

( )–INDICATES MOMENTARY POSITION

CIRCUIT CHARACTERISTICS		
CONTACT POSITION		CIRCUIT DIAGRAM
OFF	(ON) 1–3 2–4	1 2 3 4

SPECIFICATIONS:

MATERIALS:
CASE: NYLON 66 UL94HB, 30% GF–BLACK
ACTUATOR: PBT OR NYLON 66 UL94HB, SEE P/N TABLE
COVER: PET FILM, WHITE FINISH
MOVING CONTACT: COPPER ALLOY–SILVER FINISH
FIXED CONTACT/TERMINAL: COPPER ALLOY–SILVER OVER NICKEL FINISH

ELECTRICAL:
MAX CONTACT RATING: 50MILLIAMPS@24V DC,
MIN CONTACT RATING: 10MICROAMPS@1V DC
INITIAL CONTACT RESISTANCE, 100 MILLIOHMS MAX
INSULATION RESISTANCE, 100 MEGOHM MIN. @ 100V DC
DIELECTRIC STRENGTH, 500 V AC FOR 1 MINUTE
LIFE EXPECTANCY, 100,000 CYCLES MIN (2 CYCLES PER SECOND AND 150% ACTUATION FORCE), EXCEPT FOR THE 520 GF MODEL WHICH WOULD BE 50,000 CYCLES MIN.

MECHANICAL:
ACTUATION FORCE, SEE TABLE
ACTUATION TRAVEL, .010 +.008/–.004
LIFE EXPECTANCY, 100,000 CYCLES MIN (2 CYCLES PER SECOND AND 150% ACTUATION FORCE), EXCEPT FOR THE 520 GF MODEL WHICH WOULD BE 50,000 CYCLES MIN.

ENVIRONMENTAL:
OPERATING TEMPERATURE, –35 TO +85 DEGREES C
STORAGE TEMPERATURE, –35 TO +85 DEGREES C
THERMAL SHOCK, PER EIA–364–32C, –35 TO +85 DEGREES C
SOLDERABILITY, PER EIA–364–52, CLASS 2, CATEGORY 1, CATEGORY 2, 95% MINIMUM COVERAGE
RESISTANCE TO SOLDER HEAT, PER 109–202, CONDITION B

Notes:
1. ALL MATERIALS AND FINISHES SHALL COMPLY WITH EU DIRECTIVE 2002/95/EC OF 27JAN2003 (ROHS).

	ACTUATOR MAT'L	ACTUATOR COLOR	ACTUATION FORCE	DIM C	DIM B	DIM A	ALCO P/N	P/N
	NYLON 6/6	YELLOW	520 +/–100 GF	3.09 (.122)	8.50 (.335)	4.90 (.193)	FSM18JAAH	3–1825910–7
OBSOLETE	NYLON 6/6	RED	260 +/–50 GF	3.09 (.122)	8.50 (.335)	4.90 (.193)	FSM18JAH	~~3–1825910–6~~
	NYLON 6/6	BLACK	160 +/–50 GF	3.09 (.122)	8.50 (.335)	4.90 (.193)	FSM18JH	3–1825910–5
	NYLON 6/6	BROWN	100 +/–50 GF	3.09 (.122)	8.50 (.335)	4.90 (.193)	FSM18JLH	3–1825910–4
	NYLON 6/6	YELLOW	520 +/–100 GF	2.80 (.110)	17.00 (.669)	13.40 (.527)	FSM16JAAH	3–1825910–3
	NYLON 6/6	RED	260 +/–50 GF	2.80 (.110)	17.00 (.669)	13.40 (.527)	FSM16JAH	3–1825910–2
	NYLON 6/6	BLACK	160 +/–50 GF	2.80 (.110)	17.00 (.669)	13.40 (.527)	FSM16JH	3–1825910–1
OBSOLETE	NYLON 6/6	BROWN	100 +/–50 GF	2.80 (.110)	17.00 (.669)	13.40 (.527)	FSM16JLH	~~3–1825910–0~~
	NYLON 6/6	YELLOW	520 +/–100 GF	2.87 (.118)	13.00 (.512)	9.40 (.370)	FSM14JAAH	2–1825910–9
	NYLON 6/6	RED	260 +/–50 GF	2.87 (.118)	13.00 (.512)	9.40 (.370)	FSM14JAH	2–1825910–8
	NYLON 6/6	BLACK	160 +/–50 GF	2.87 (.118)	13.00 (.512)	9.40 (.370)	FSM14JH	2–1825910–7
	NYLON 6/6	BROWN	100 +/–50 GF	2.87 (.118)	13.00 (.512)	9.40 (.370)	FSM14JLH	2–1825910–6
	NYLON 6/6	YELLOW	520 +/–100 GF	3.20 (.126)	8.00 (.315)	4.40 (.173)	FSM12JAAH	2–1825910–5
	NYLON 6/6	BLACK	260 +/–50 GF	3.20 (.126)	8.00 (.315)	4.40 (.173)	FSM12JABH	2–1825910–4
	NYLON 6/6	RED	260 +/–50 GF	3.20 (.126)	8.00 (.315)	4.40 (.173)	FSM12JAH	2–1825910–3
	NYLON 6/6	WHITE	160 +/–50 GF	3.20 (.126)	8.00 (.315)	4.40 (.173)	FSM12JH	2–1825910–2
	NYLON 6/6	BROWN	100 +/–50 GF	3.20 (.126)	8.00 (.315)	4.40 (.173)	FSM12JLH	2–1825910–1
	NYLON 6/6	YELLOW	520 +/–100 GF	3.25 (.128)	7.30 (.287)	3.70 (.146)	FSM10JAAH	2–1825910–0
	NYLON 6/6	RED	260 +/–50 GF	3.25 (.128)	7.30 (.287)	3.70 (.146)	FSM10JAH	1–1825910–9
	NYLON 6/6	IVORY	160 +/–50 GF	3.25 (.128)	7.30 (.287)	3.70 (.146)	FSM10JH	1–1825910–8
OBSOLETE	NYLON 6/6	BROWN	100 +/–50 GF	3.25 (.128)	7.30 (.287)	3.70 (.146)	FSM10JLH	~~1–1825910–7~~
OBSOLETE	PBT	YELLOW	520 +/–100 GF	3.10 (.122)	9.50 (.374)	5.90(.232)	FSM8JAAH	~~1–1825910–6~~
	PBT	RED	260 +/–50 GF	3.10 (.122)	9.50 (.374)	5.90(.232)	FSM8JAH	1–1825910–5
	PBT	BLACK	160 +/–50 GF	3.10 (.122)	9.50 (.374)	5.90(.232)	FSM8JH	1–1825910–4
	PBT	BROWN	100 +/–50 GF	3.10 (.122)	9.50 (.374)	5.90(.232)	FSM8JLH	1–1825910–3
	NYLON 6/6	YELLOW	520 +/–100 GF	3.30(.130)	7.00 (.276)	3.40 (.134)	FSM6JAAH	1–1825910–2
OBSOLETE	NYLON 6/6	RED	260 +/–50 GF	3.30(.130)	7.00 (.276)	3.40 (.134)	FSM6JAH	~~1–1825910–1~~
	NYLON 6/6	BLUE	160 +/–50 GF	3.30(.130)	7.00 (.276)	3.40 (.134)	FSM6JH	1–1825910–0
OBSOLETE	NYLON 6/6	BROWN	100 +/–50 GF	3.30(.130)	7.00 (.276)	3.40 (.134)	FSM6JLH	~~1825910–9~~
	PBT	YELLOW	520 +/–100 GF	N/A	5.00 (.196)	1.40 (.055)	FSM4JAAH	1825910–8
	PBT	RED	260 +/–50 GF	N/A	5.00 (.196)	1.40 (.055)	FSM4JAH	1825910–7
	PBT	BLACK	160 +/–50 GF	N/A	5.00 (.196)	1.40 (.055)	FSM4JH	1825910–6
	PBT	BROWN	100 +/–50 GF	N/A	5.00 (.196)	1.40 (.055)	FSM4JLH	1825910–5
OBSOLETE	PBT	YELLOW	520 +/–100 GF	N/A	4.30 (.169)	0.70 (.028)	FSM2JAAH	~~1825910–4~~
	PBT	RED	260 +/–50 GF	N/A	4.30 (.169)	0.70 (.028)	FSM2JAH	1825910–3
	PBT	BLACK	160 +/–50 GF	N/A	4.30 (.169)	0.70 (.028)	FSM2JH	1825910–2
	PBT	BROWN	100 +/–50 GF	N/A	4.30 (.169)	0.70 (.028)	FSM2JLH	1825910–1

THIS DRAWING IS A CONTROLLED DOCUMENT.
DIMENSIONS: mm [INCHES]
TOLERANCE UNLESS OTHERWISE SPECIFIED: 6 PLC ± – ; 3 PLC ± – ; 2 PLC ± 0.30 [.012] ; 1 PLC ± – ; ANGLES ± –
MATERIAL: SEE SPECIFICATIONS
FINISH: –

DR: M.BINNER 07NOV08
CK: M.SARVER 07NOV08
APVD: M.SARVER 07NOV08
PRODUCT SPEC: –
APPLICATION SPEC: –
WEIGHT: –

TE Connectivity
NAME: 6MM TACT SWITCH, THRU–HOLE HIGH TEMP
SIZE: A1 CAGE CODE: 00779 DRAWING NO: C–1825910
RESTRICTED TO: –
CUSTOMER DRAWING SCALE: 12:1 SHEET 1 OF 1 REV: C4

Downloaded from Elcodis.com electronic components distributor