5

MICRO SWITCH
FREEPORT ILLINOIS
A DIVISION OF HONEYWELL
FED. MFG. CODE 91929

SWITCH-BASIC

CATALOG LISTING
V3-1001
MILITARY STDS PARTS NO.
MS 25253-1

CK-L0100

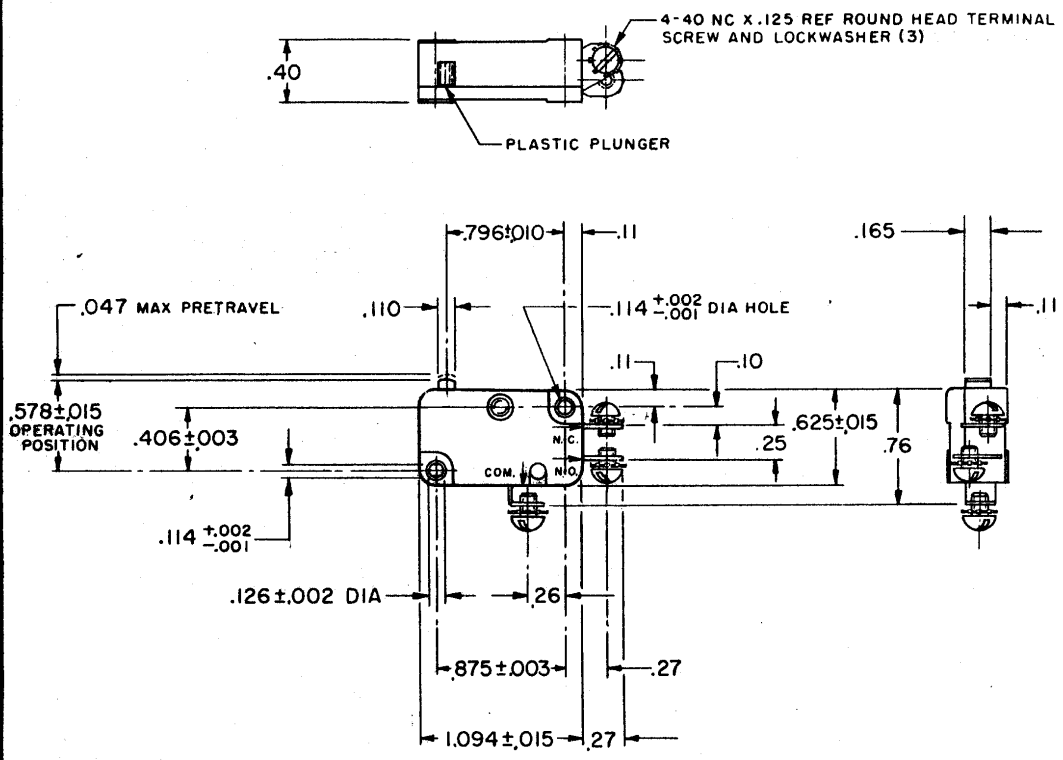

NOTES
1 - MARK "MS-25253-1" AND SOURCE CODE "91929" ON SWITCH AND LABEL OF PACKING BOX
2 - MARK SWITCH WITH CATALOG LISTING AND DATE CODE

THIS DRAWING COVERS A PROPRIETARY ITEM AND IS THE PROPERTY OF MICRO SWITCH, A DIVISION OF MINNEAPOLIS-HONEYWELL REGULATOR CO. THIS DRAWING IS NOT TO BE COPIED OR USED WITHOUT THE APPROVAL OF MICRO SWITCH.

CHARACTERISTICS	ELECTRICAL DATA	SCALE FULL
OPERATING FORCE — — — — — — 6 - 14 OZ	CONTACT ARRANGEMENT S P D T	DO NOT SCALE PRINT
RELEASE FORCE — — — — — — 4 OZ MIN		UNLESS OTHERWISE SPECIFIED DIMENSIONS ARE IN INCHES
RELEASE TRAVEL — — — — — — — — .010 MIN		TOLERANCES ARE:
DIFFERENTIAL TRAVEL — — — .006 - .016		ONE PLACE (.0) ±.030
OVERTRAVEL — — — — — — — — .040 MIN		TWO PLACE (.00) ±.015
FREE POSITION — — — — — — .625 MAX		THREE PLACE (.000) ±.005
		ANGLES ±
		WEIGHT 9.1 GRAMS

V3-1001 | M | DRAWING NUMBER | ISSUE | REPLACES | RELEASE NO. SR 10660

REVISIONS

A	C0301-89	WEG 17 AUG 65	
B	C021908	L E B 15 AUG 67	
C	C024941	M B S 3 DEC 68	
D	CD26075	M B S 27 AUG 69	
E	C026943	S R H 12 FEB 70	
F	C045436	D J W 31 JAN 79	
G	CO 76499	DCS 6 JAN 94	
H	CO 78754	D C S 23 SEP 94	

DRAWN LMH 6 DEC 62 | CHECK | PAW 7 DEC 62 | CHECK | RRJ 7 DEC 62 | CHECK

FO-50378

Downloaded from Elcodis.com electronic components distributor