THIS COPY IS PROVIDED ON A RESTRICTED BASIS AND IS NOT TO BE USED IN ANY WAY DETRIMENTAL TO THE INTERESTS OF PANDUIT CORP.

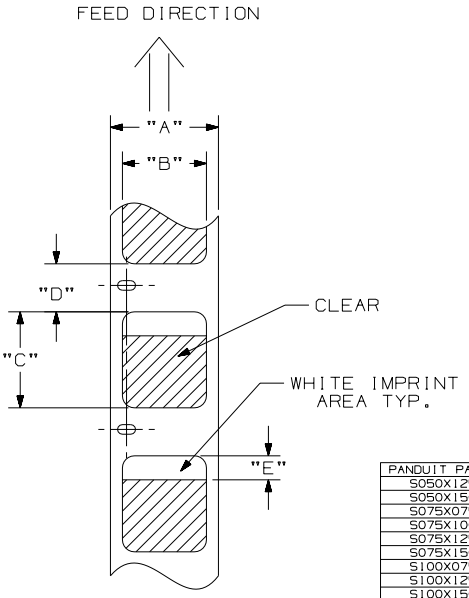

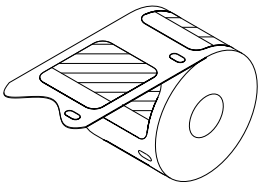

NOTES:
1. SEE MFG. DWG. NO. A61320.
2. DIMENSIONS IN [ ] ARE IN MILLIMETERS.

PANDUIT PART NO.	MATERIAL	"A"	"B"	"C"	"D"	"E" +/- .031	LABELS/ROLL
S050X125VAC	**CLEAR VINYL GMV3**	0.85 [21.59]	0.500 [12.70]	1.250 [31.75]	0.250 [6.35]	0.38 [9.65]	225
S050X150VAC	**CLEAR VINYL GMV3**	0.85 [21.59]	0.500 [12.70]	1.500 [38.10]	0.250 [6.35]	0.50 [12.70]	200
S075X075VAC	**CLEAR VINYL GMV3**	1.13 [28.70]	0.750 [19.05]	0.750 [19.05]	0.250 [6.35]	0.25 [6.35]	350
S075X100VAC	**CLEAR VINYL GMV3**	1.13 [28.70]	0.750 [19.05]	1.000 [25.40]	0.250 [6.35]	0.38 [9.65]	275
S075X125VAC	**CLEAR VINYL GMV3**	1.13 [28.70]	0.750 [19.05]	1.250 [31.75]	0.250 [6.35]	0.38 [9.65]	225
S075X150VAC	**CLEAR VINYL GMV3**	1.13 [28.70]	0.750 [19.05]	1.500 [38.10]	0.250 [6.35]	0.50 [12.70]	200
S100X075VAC	**CLEAR VINYL GMV3**	1.13 [28.70]	1.000 [25.40]	0.750 [19.05]	0.250 [6.35]	0.25 [6.35]	350
S100X125VAC	**CLEAR VINYL GMV3**	1.13 [28.70]	1.000 [25.40]	1.250 [31.75]	0.250 [6.35]	0.38 [9.65]	225
S100X150VAC	**CLEAR VINYL GMV3**	1.13 [28.70]	1.000 [25.40]	1.500 [38.10]	0.250 [6.35]	0.50 [12.70]	200
S100X160VAC	**CLEAR VINYL GMV3**	1.13 [28.70]	1.000 [25.40]	1.600 [40.64]	0.275 [6.99]	0.80 [20.32]	175
S100X220VAC	**CLEAR VINYL GMV3**	1.13 [28.70]	1.000 [25.40]	2.200 [55.88]	0.300 [7.62]	1.10 [27.94]	125
S100X225VAC	CLEAR VINYL GMV3	1.13 [28.70]	1.000 [25.40]	2.250 [57.15]	0.250 [6.35]	0.75 [19.05]	125
S100X400VAC	CLEAR VINYL GMV3	1.13 [28.70]	1.000 [25.40]	4.000 [101.60]	0.250 [6.35]	1.00 [25.40]	75
S100X650VAC	CLEAR VINYL GMV3	1.13 [28.70]	1.000 [25.40]	6.500 [165.10]	0.250 [6.35]	1.50 [38.10]	50

REV	DATE	BY	CHK	DESCRIPTION	ECN - R	CUST	SUP
1	7-13-06	RVU		MISC. REVISIONS TO TABLE.	4589 R		
0	5-11-06	RVU	DWY	DRAWING RELEASE.	4503 R		

CAD FILENAME/LAYERS: 100472MC_C10415_SxxxXxxxVAC_01.PRT

PANDUIT CORP TINLEY PARK, ILLINOIS

LS8 SELF-LAMINATING LABELS
S***X***VAC

UNLESS OTHERWISE SPECIFIED, DIMENSIONAL TOLERANCES ARE: (.X) ± .031 (.XXX) ± .005 (.XX) ± .015 ANGLES ± 5°

UNLESS OTHERWISE SPECIFIED, ALL DIMENSIONS ARE GIVEN IN INCHES. THIRD ANGLE PROJECTION

DRAWN BY: RVU
DATE: 2-28-05
CHK'D:
MAT'L: SEE TABLE
SCALE: NTS
DRAWING NO.: C10415
DWG SIZE: B

Downloaded from Elcodis.com electronic components distributor