English 日本語 한국어 简体中文

Search: Enter Part No. or Keyword Go

My Parts (0 items)
Register
Login

Product Name | Cross-Ref | Catalog | Literature | Industries | Standards | Contact Us | About Us | Investors | Careers

Connectors | Sockets | I/O Connectors | Cable Assemblies | Fiber Optics | Printed Circuit Products | Automation and Electrical | And More...

Switch Language
English

Need Assistance?
Contact Us
Find a Distributor
Order Samples
Tech Library

Printer-friendly page

Email this page

Home Crimp Housings Datasheet

Part Number: 0039012061

Status: Active **Overview:** Mini-Fit Jr.™

Description: 4.20mm (.165") Pitch Mini-Fit Jr.™ Plug Housing, Dual Row, with and without Panel Mount Ears, UL 94V-2, Panel Mount, 6 Circuits

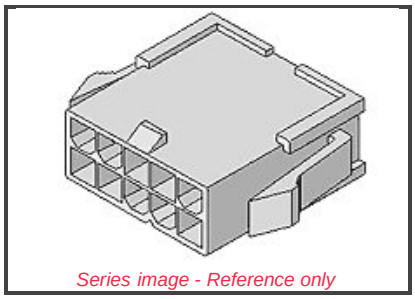

Series image - Reference only

Documents:

Note - Please disable browser pop-up blockers for documents on www.molex.com

- Drawing (PDF)
- Product Specification PS-5557-003 (PDF)
- Product Specification PS-5557-012 (PDF)
- Product Specification PS-5557-013 (PDF)
- Product Specification PS-5557-016 (PDF)
- Product Specification PS-5557-042 (PDF)
- 3D Model
- Related Catalog Page (PDF)

Order Products:

Check Distributor Inventory | Add to My Parts | Request Samples

EU RoHS **China RoHS**
ELV and RoHS Compliant

Need more information on product compliance?

Email **productcompliance@molex.com**

Please visit the Contact Us section for any non-product compliance questions.

Part Detail: (show all)

General | Physical | Electrical | Material Info

General

Product Family	Crimp Housings
Series	5559
Comments	Not for use with Strain Relief
Overview	Mini-Fit Jr.™
Product Name	Mini-Fit Jr.™

Physical

Breakaway	No
Circuits (maximum)	6
Color - Resin	Natural
Flammability	94V-2
Gender	Male
Material - Resin	Nylon
Number of Rows	2
Packaging Type	Bag
Panel Mount	Yes
Pitch - Mating Interface (in)	0.165 In
Pitch - Mating Interface (mm)	4.20 mm
Pitch - Term. Interface (in)	0.165 In
Pitch - Term. Interface (mm)	4.20 mm
Polarized to Mating Part	Yes
Stackable	No
Temperature Range - Operating	-40°C to +105°C

Electrical

CSA	LR19980
TUV	R75142
UL	E29179

Material Info

Old Part Number	5559-06P

Search Parts in this Series
5559 Series

Mates With
5557d Receptacle Housing

Use With
5558, 44478, 30490, 41995

Downloaded from Elcodis.com electronic components distributor

ENG. NO. SD-5559-NP

EDP NO. 39-01-2**1

:MM DIMENSIONS IN METRIC DO NOT SCALE DRAWING

NOTES

1. TERMINAL : 5558 SERIES
2. MATES WITH : 5557-NR
3. THIS DIMENSION IS ALLOWABLE UP TO "D" DIMENSION IN CASE OF 2 CIRCUITS.
4. PANEL HOLE TO BE PUNCHED OUT IN THE SAME DIRECTION AS INSERTION INTO THE PANEL.

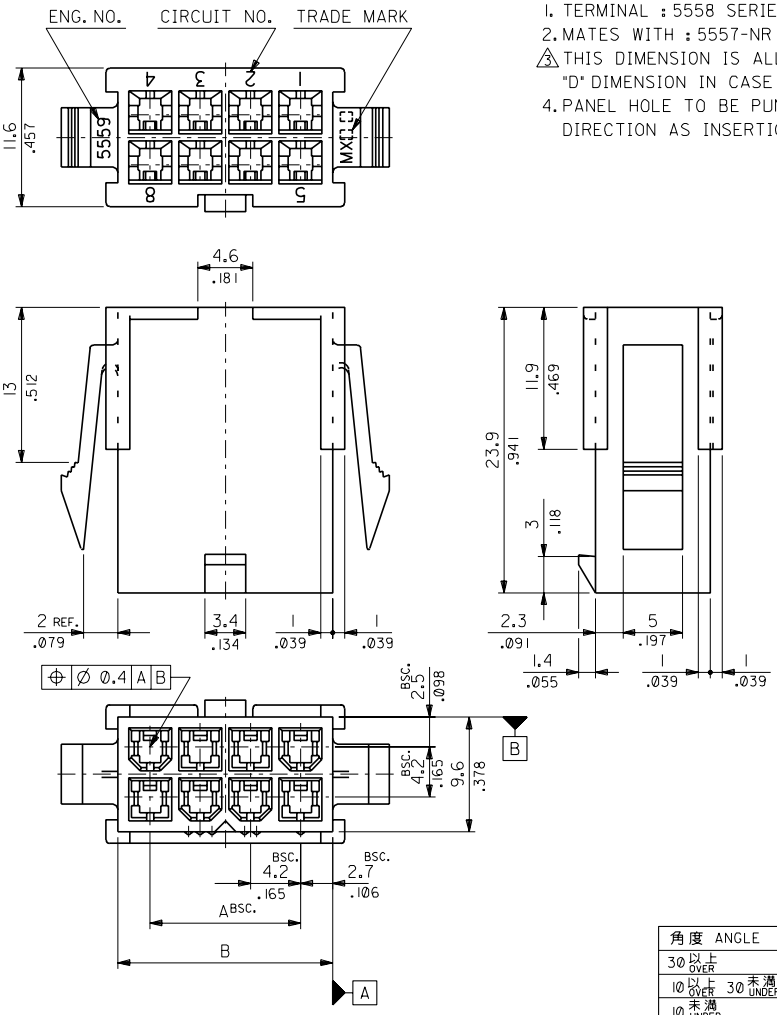

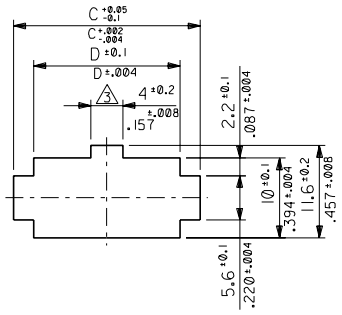

RECOMMENDED PANEL HOLE DIMENSION

(THICKNESS : 0.8-2.0/.032-.079)

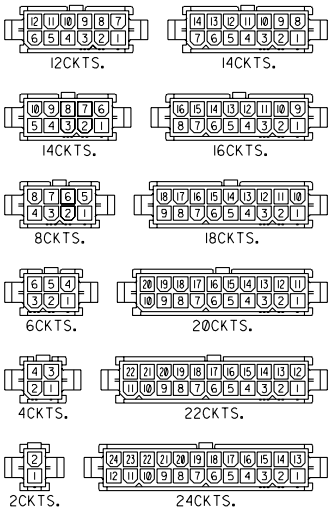

CIRCUIT SIZE LAYOUT (SCALE : 1-1)

D	C	B	A	EDP NO.	ENG. NO.	CIRCUIT
52.1/2.051	57.0/2.244	51.6/2.031	46.2/1.819	39-01-2241	5559-24P	24
47.9/1.886	52.8/2.079	47.4/1.866	42.0/1.654	-2221	-22P	22
43.7/1.720	48.6/1.913	43.2/1.701	37.8/1.488	-2201	-20P	20
39.5/1.555	44.4/1.748	39.0/1.535	33.6/1.323	-2181	-18P	18
35.3/1.390	40.2/1.583	34.8/1.370	29.4/1.158	-2161	-16P	16
31.1/1.224	36.0/1.417	30.6/1.205	25.2/.992	-2141	-14P	14
26.8/1.055	31.8/1.252	26.4/1.039	21.0/.827	-2121	-12P	12
22.6/.890	27.6/1.087	22.2/.874	16.8/.661	-2101	-10P	10
18.4/.724	23.4/.921	18.0/.709	12.6/.496	-2081	-08P	8
14.2/.559	19.2/.756	13.8/.543	8.4/.331	-2061	-06P	6
10.0/.394	15.0/.591	9.6/.378	4.2/.165	-2041	-04P	4
5.8/.228	10.8/.425	5.4/.213	—	39-01-2021	5559-02P	2

角度 ANGLE	±3°
30以上 OVER	±0.4 ±0.25
10以上 30未満 OVER UNDER	±0.3 ±0.25
10未満 UNDER	±0.2
一般公差 GENERAL TOLERANCES	

LTR 記号	REVISION RECORD 変更内容	CHK. DR.	DATE 日付
G	REVISED & REDRAWN (J80832)	H.H. Y.Y	'88/10/17

REVISE ONLY ON CAD SYSTEM

材料 MATERIAL: NYLON 66, UL94V-2

仕上げ FINISH: —

適用電線範囲 WIRE RANGE: —

被覆外径 INS. RANGE: —

DRAWN BY '88/10/14 H.HIRAMOTO

CHK'D BY '88/10/21 Y.YAMADA

APP'D BY '88/10/24 M.ENOMOTO

SCALE 3 - 1

MOLEX-JAPAN CO.,LTD. 日本モレックス株式会社

EDP. NO. 39-01-2**1

ENG. NO. SD-5559-NP

REV G

TITLE 名称 NEW MINI. FIT CONNECTOR CRIMP PIN HOUSING

5559.S07

THIS DRAWING CONTAINS INFORMATION THAT IS PROPRIETARY TO MOLEX(JAPAN) AND SHOULD NOT BE USED WITHOUT WRITTEN PERMISSION
本図面は日本モレックス（株）の所有する情報を含むもので当社の許可なく複製を禁止する。

MXJ-8

Downloaded from Elcodis.com electronic components distributor