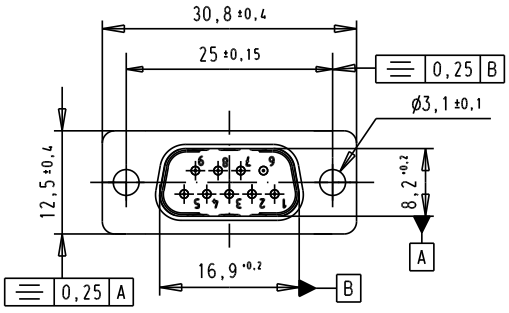

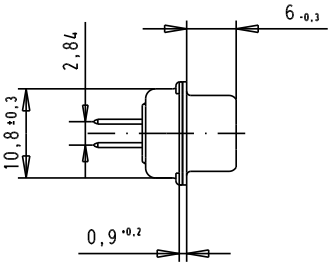

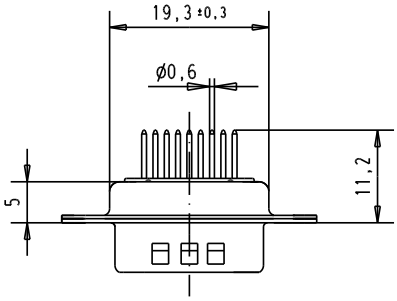

PCB Layout, Component side

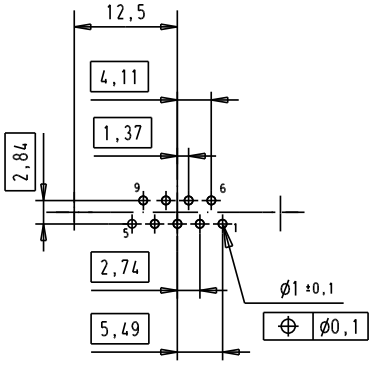

SPECIFICATION

Mating Cycles	500
Filter type	C
Capacitance	3900pf ±20%
Working Voltage	100v
Current Rating	7.5A
Insulation Resistance	>1GΩ

FREQUENCY (MHz)	ATTENUATION (dB)
5	6dB
10	11dB
50	25dB
100	35dB
500	35dB
1000	32dB

				Dat.	Name
			Detail.	8-JUL-02	CV
			Insp.		
			Stand.		
33241	14/10/05	JMDR			
31058	8-JUL-02	CV			
Mod.	Dat.	Name			

All Dim. in mm
Orig. Size DIN A 4

HARTING EURL
F-95972 Paris

D-Sub, male, straight, 9 Poles, solder pins, tin plated shell with dimples and holes

Ma?Mstab/ Scale 1.5:1

TB 09641227240

Sub.

Blatt/ Page 1/1

Downloaded from Elcodis.com electronic components distributor