Downloaded from Elcodis.com electronic components distributor

PRODUCT NO.	STAND OFF HEIGHT DIM "L"
74375-001/001LF	0.0
74375-021/021LF	2.0
74375-022/022LF	2.2
74375-041/041LF	4.0
74375-043/043LF	4.3
74375-051/051LF	5.0

NOTES:

1. MATERIAL:
   GUIDE: POLYPHTHARAMIDE UL94V-0 (COLOR: BLACK)
   PLATE: STAINLESS STEEL
   EMI CONTACT: PHOSPHOR BRONZE

2. FINISH:
   EMI CONTACT: CONTACT AREA: 0.5um Au
   UNDER PLATING: 2.0um Ni

3 THE PART NUMBER WITH "LF" SUFFIX IS LEAD FREE P/N.
4 IF LF P/N, PACKAGING MEETS GS-14-920 SPECIFICATION.
5 FOR LEAD FREE P/N THE PRODUCT MEET EUROPEAN UNION DIRECTIVES AND OTHER COUNTRY REGULATION AS DESCRIBED IN GS-22-008.
6 FOR LEAD FREE P/N THE HOUSING WILL WITHSTAND EXPOSURE TO 260 DEGREE C PEAK TEMPERATURE FOR 40 SECONDS IN A CONVECTION, INFRO-RED OR VAPOR OPHASE REFLOW PROCESS.

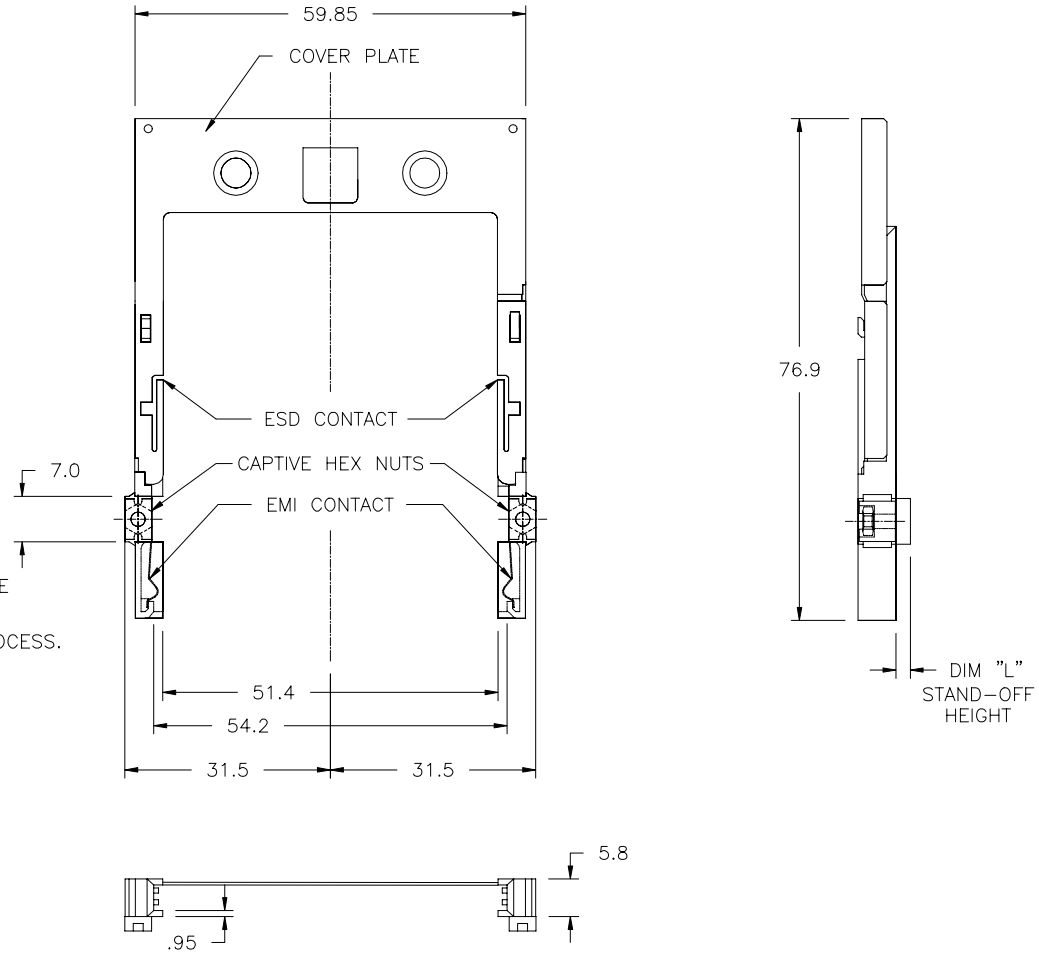

mat'l. code				tolerances unless otherwise specified				CUSTOMER COPY	FCI
ltr	ecn no	dr	date	linear	.X ±.3			projection	title NON-EJECT MECHANISM ASSEMBLY
A	V71609	RHG	12/5/97		.XX ±.13				
B	V90147	CGC	2/2/99		.XXX ±.051				
C	N07-0041	DT	2/2/07	angles	0° ±2°			mm	product family MCS / code –
				dr	R.GRAPE	12/5/97			size A4 / dwg no 74375
				engr	D.BRANN	12/5/97			
				chr	D.BRANN	12/5/97		scale 1/1	sheet 1 of 1
				appd	D.BRANN	12/5/97			
sheet index	revision sheet								

cage code 22526

form no. 7530-001-103

Tous droits strictement reserves. Reproduction ou communication a des tiers interdite sous quelque forme que ce soit sans autorisation ecrite du propietaire. Propriete de © BERG ELECTRONICS. Droits de reproduction BERG ELECTRONICS INC.

All rights reserved. Reproduction in any form whatever is not permitted without written authority from the proprietor. Property of © BERG ELECTRONICS Copyright BERG ELECTRONICS INC.

PDM: Rev:C STATUS: Released Printed: Oct 12, 2010