THIS DRAWING IS UNPUBLISHED. RELEASED FOR PUBLICATION OCT , 1988.
© COPYRIGHT 1988 A1 ALL RIGHTS RESERVED.

LOC	DIST
ES	00

REVISIONS

P	LTR	DESCRIPTION	DATE	DWN	APVD
	A1	REVISED PER ECO-11-005033	26MAR11	RK	HMR

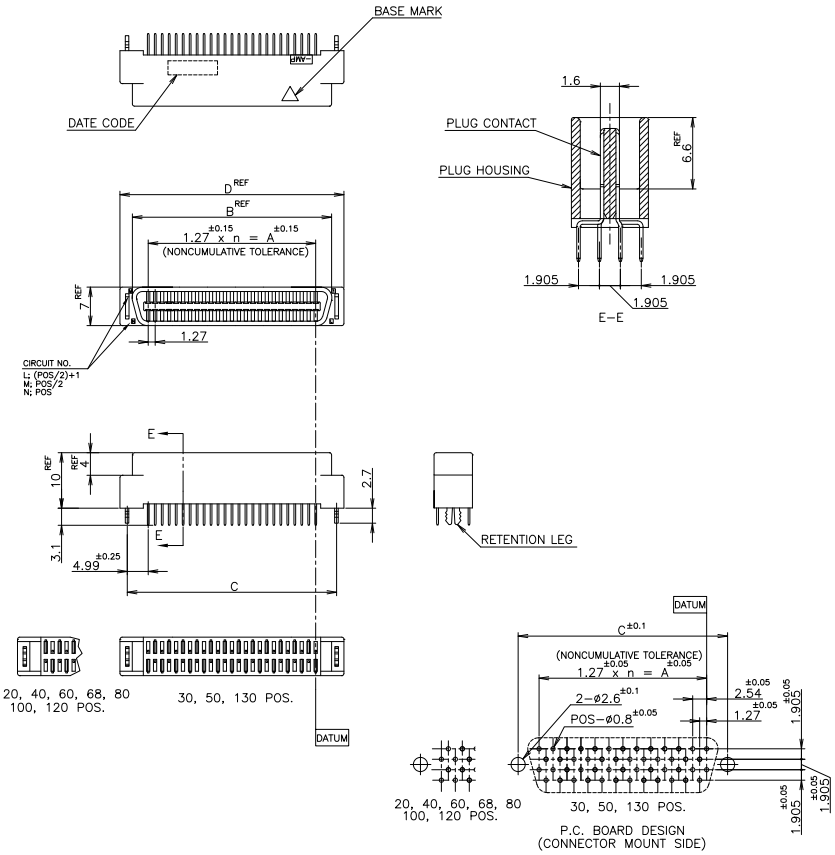

1 NUMBER "n" S COUNTED FROM DATUM
(CIRCUIT NO.1 IS "AMP" MARK SIDE.)

2 MATERIAL: HOUSING; 66 NYLON (GF) UL 94V-0, BLACK.
: CONTACT; PHOSPHOR BRONZE.
: RETENTION LEG; BRASS.

3 FINISH: CONTACT; Au AT CONTACT AREA (SEE TABLE),
TIN AT TINE OVER Ni.
RETENTION LEG; TIN UNDER Ni.

6-	-2			130	64	81.28	89.62	91.25	93.90
6-	-1			120	59	74.93	83.27	84.90	87.55
6-	-0			100	49	62.23	70.57	72.20	74.85
5-	-9			80	39	49.53	57.87	59.50	62.15
5-	-8			68	33	41.91	50.25	51.88	54.53
5-	-7			60	29	36.83	45.17	46.80	49.45
5-	-6			50	24	30.48	38.82	40.45	43.10
5-	-5			40	19	24.13	32.47	34.10	36.75
5-	-3			30	14	17.78	26.12	27.75	30.40
5-	-1	0.00076		20	9	11.43	19.77	21.40	24.05
4-	-2			130	64	81.28	89.62	91.25	93.90
4-	-1			120	59	74.93	83.27	84.90	87.55
4-	-0			100	49	62.23	70.57	72.20	74.85
3-	-9			80	39	49.53	57.87	59.50	62.15
3-	-8			68	33	41.91	50.25	51.88	54.53
3-	-7			60	29	36.83	45.17	46.80	49.45
3-	-6			50	24	30.48	38.82	40.45	43.10
3-	-5			40	19	24.13	32.47	34.10	36.75
3-	-3			30	14	17.78	26.12	27.75	30.40
3-	-1	0.0005		20	9	11.43	19.77	21.40	24.05
1-	-2			130	64	81.28	89.62	91.25	93.90
1-	-1			120	59	74.93	83.27	84.90	87.55
1-	-0			100	49	62.23	70.57	72.20	74.85
	-9			80	39	49.53	57.87	59.50	62.15
	-8			68	33	41.91	50.25	51.88	54.53
	-7			60	29	36.83	45.17	46.80	49.45
	-6			50	24	30.48	38.82	40.45	43.10
	-5			40	19	24.13	32.47	34.10	36.75
	-3			30	14	17.78	26.12	27.75	30.40
5175473-1		0.0002		20	9	11.43	19.77	21.40	24.05
PART NO.		Au PLATE		POS.	n	A	B	C	D

5175473

LEAD FREE

THIS DRAWING IS A CONTROLLED DOCUMENT.

GENERAL TOLERANCE
10 ≥ : ±0.2
30 ≥ > 10: ±0.25
100 ≥ > 30: ±0.3
ANGLES: ±3°

DIMENSIONS: mm
TOLERANCES UNLESS OTHERWISE SPECIFIED:
0 PLC ±
1 PLC ± -
2 PLC ± -
3 PLC ± -
4 PLC ± -
ANGLES ± -

MATERIAL 2
FINISH 3

DWN Julyee Zhu 19AUG2004
CHK Steven Yao 19AUG2004
APVD Ikuo Enomoto 19AUG2004
PRODUCT SPEC 108-60038
APPLICATION SPEC
WEIGHT -

TE Connectivity

NAME
AMP CHAMP .050 CONNECTOR (B-T-B)
PLUG CONNECTOR
(VERTICAL WITH RETENTION LEG)

SIZE A2 | CAGE CODE 00779 | DRAWING NO C-5175473 | RESTRICTED TO

CUSTOMER DRAWING | SCALE NTS | SHEET 1 OF 1 | REV A1

1471-9 (3/11)

Downloaded from Elcodis.com electronic components distributor