used for: D-SUB COMBINATION

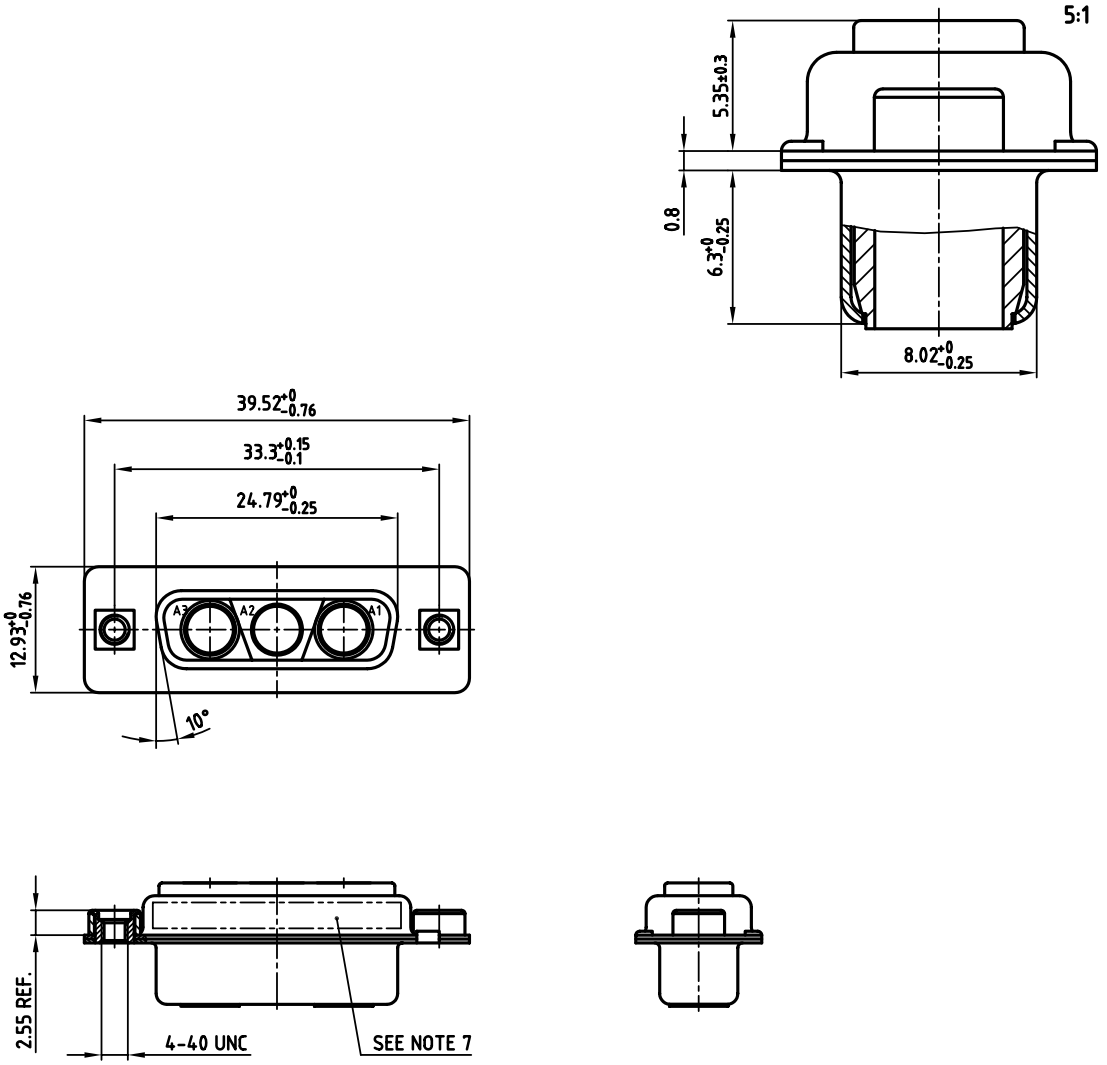

NOTES:

1. METALSHELLS: STEEL; min. 320µ" TIN
2. INSULATORS: PBT GF UL 94 V-0, GREEN
3. NO CONTACTS ON POS. A1-A3
4. THREADED INSERT: COPPER ALLOY; min. 200µ" TIN over 80µ" NICKEL
5. COLLAR: COPPER ALLOY; min. 200µ" TIN over 80µ" NICKEL
6. MAXIMUM TORQUE VALUE FOR THREAD: 6" LBS
7. CONNECTOR IS PART MARKED: 303W3CSXX99A30X CONEC ABC

Directive 2002/95/EC „RoHS" Compliant

APPROVAL # FREIGABE # DEBLOCAGE # AUTORIZACION # APPROVAL

CUSTOMER APPROVAL DATE:

NAME: TITLE:

COMPANY NAME:

APPROVAL # FREIGABE # DEBLOCAGE # AUTORIZACION # APPROVAL

THIS DRAWING MAY NOT BE COPIED OR REPRODUCED IN ANY WAY, AND MAY NOT BE PASSED ON TO A THIRD PARTY WITHOUT WRITTEN PERMISSION. OWNERSHIP AND COPYRIGHT OF CONEC GmbH

DO NOT ALTER CAD DRAWING BY HAND

rev.	description	date	name
a	Origin		

tolerance

dim. in mm

2006	date	name
drawn	09.02.	Lehmenkühler
appd.	09.02.	Mickenbecker
norm		
d-old		

CONEC®

scale: 2:1 (5:1)

material: SEE NOTES

title:

D-SUB COMBINATION FEMALE

3W3CS

with threaded insert

dwg no: 13K1A1716

AutoCAD 2004

DIN-A 3

sh: 1/1

part no: 303W3CSXX99A30X

Downloaded from Elcodis.com electronic components distributor