THIS DRAWING IS UNPUBLISHED. RELEASED FOR PUBLICATION 2003
© COPYRIGHT 2003 BY TYCO ELECTRONICS CORPORATION. ALL RIGHTS RESERVED.

LOC	DIST	P	LTR	DESCRIPTION	DATE	DWN	APVD
GT			A	NEW GROUP DRAWING CREATED	9OCT2006	TK	RVl

STRIP FORM - UNSEALED
Bandware - ungedichtet

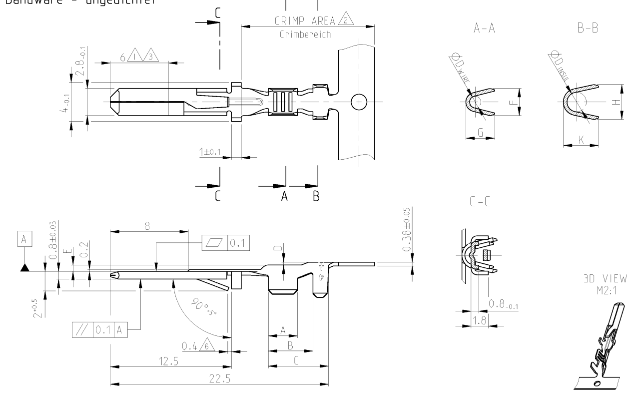

STRIP FORM - SINGLE WIRE SEAL
Bandware - Einzel-Dichtung System

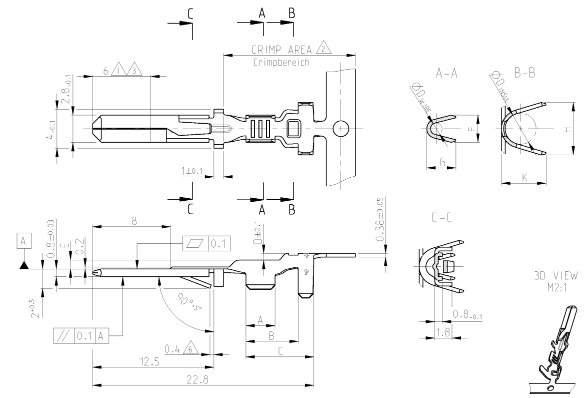

LOOSE PIECE
Einzelausführung

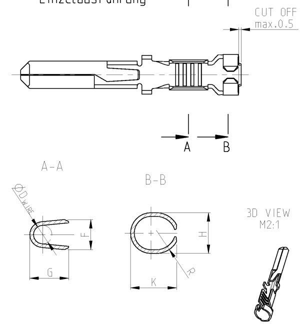

	HAND TOOL Handzage	APPLICATOR Anschlag-WKZ	K	H	R	G	F	D WIRE	K	H	D INSUL	G	F	D WIRE	E	D	C	B	A	REELING △7	INSULATION RANGE Isolations-durchmesser	WIRE RANGE DGB [mm²]	FINISH Oberfläche	MATERIAL	TYCO ORDER No. LOOSE PIECE Einzelausführung	REV	TYCO ORDER No. STRIP FORM Bandware
			CRIMP DIMENSIONS Crimpmaßen: LOOSE PIECE Einzelausführung – INSULATION BARREL Isolationsbereich			LOOSE PIECE – WIRE BARREL Drahtbereich			STRIP FORM Bandware – INSULATION BARREL Isolationsbereich			STRIP FORM – WIRE BARREL Drahtbereich															
SINGLE WIRE SEAL/Einzel-Dichtung	N/A	N/A	4.3	4.8	2.8	4.0	3.1	1.7	4.6	5.6	3.6	4.0	3.8	1.7	0.85	0.95	7.5	5.9	3.5	B	Ø3.4	1.0 - 2.5 FLR	PRETINNED min.1µm	CuSn4	0-965975-5	J	0-929949-5
																				B			SEL. GOLD PLATED △1 △2	CuZn30	0-965975-4	J	0-929949-4
																				A			PLAIN	CuZn30	0-965975-3	J	0-929949-3
																				B			PRETINNED min.1µm	CuZn30	0-965975-2	J	0-929949-2
																				B			SEL. SILVER PLATED △3	CuZn30	0-965975-1	J	0-929949-1
	N/A	N/A	4.3	4.8	2.8	3.0	2.2	1.2	4.6	5.4	3.2	3.0	2.8	1.2	0.9	0.7	7.0	5.4	3.0	B	Ø3.4	0.5 - 1.0 FLR	SEL. GOLD PLATED △1 △2	CuSn4	0-965974-7	A	△5 0-929948-7
																				A			PLAIN	CuSn4	0-965974-6	A	0-929948-6
																				B			PRETINNED min.1µm	CuSn4	0-965974-5	J	0-929948-5
																				B			SEL. GOLD PLATED △1 △2	CuZn30	0-965974-4	J	△5 0-929948-4
																				A			PLAIN	CuZn30	0-965974-3	J	0-929948-3
																				B			PRETINNED min.1µm	CuZn30	0-965974-2	J	0-929948-2
																				B			SEL. SILVER PLATED △3	CuZn30	0-965974-1	J	0-929948-1
UNSEALED / ungedichtet	2-1579001-1 WITH DIE SET: mit Matrize: 1579001-2	N/A	2.5	2.5	1.4	2.2	2.0	0.8	2.8	2.8	1.4	2.2	2.2	0.8	0.65	0.2	5.7	4.1	2.5	B	Ø1.15 - 1.6	0.2 - 0.5 FLR	PRETINNED min.1µm	CuSn4	0-963962-5	D	0-963961-5
																				B			SEL. GOLD PLATED △1 △2	CuZn30	0-963962-4	D	0-963961-4
																				A			PLAIN	CuZn30	0-963962-3	D	0-963961-3
																				B			PRETINNED min.1µm	CuZn30	0-963962-2	D	0-963961-2
																				B			SEL. SILVER PLATED △3	CuZn30	0-963962-1	D	0-963961-1
	539635-1 WITH DIE SET: mit Matrize: 539743-2	878416-0	3.7	3.1	1.8	3.0	2.2	1.2	4.1	3.9	1.8	3.0	2.8	1.2	0.65	0.2	6.2	4.6	3.0	B	Ø1.4 - 2.3	0.5 - 1.0 FLR	PRETINNED min.1µm	CuSn4	0-928931-5	P	0-928930-5
																				B			SEL. GOLD PLATED △1 △2	CuZn30	0-928931-4	P	0-928930-4
																				A			PLAIN	CuZn30	0-928931-3	P	0-928930-3
																				B			PRETINNED min.1µm	CuZn30	0-928931-2	P	0-928930-2
																				B			SEL. SILVER PLATED △3	CuZn30	0-928931-1	P	0-928930-1
	169400 WITH DIE SET: mit Matrize: 734262 - 0	878402-0	4.4	3.8	2.3	4.0	3.1	1.8	4.9	4.7	2.6	4.0	3.8	1.8	1.15	0.3	7.2	5.6	4.0	B	Ø1.8 - 2.9	1.0 - 2.5 FLR	PRETINNED min.1µm	CuSn4	0-928794-5	R	0-928781-5
																				B			SEL. GOLD PLATED △1 △2	CuZn30	0-928794-4	R	0-928781-4
																				A			PLAIN	CuZn30	0-928794-3	R	0-928781-3
																				B			PRETINNED min.1µm	CuZn30	0-928794-2	R	0-928781-2
																				B			SEL. SILVER PLATED △3	CuZn30	0-928794-1	R	0-928781-1
	N/A	878227-0	4.8	4.2	2.4	4.0	3.1	1.9	5.3	4.8	3.1	4.0	3.8	1.9	1.15	0.4	7.2	5.6	4.0	B	Ø2.3 - 3.5 RB-Leitung	1.5 - 3 FLR	PRETINNED min.1µm	CuSn4	0-928924-5	R	0-927893-5
																				B			SEL. SILVER PLATED △3	CuSn4	0-928924-4	R	0-927893-4
																				A			PLAIN	CuSn4	0-928924-3	R	0-927893-3
																				B			SEL. GOLD PLATED △1 △2	CuSn4	0-928924-2	R	0-927893-2
																				B			PRETINNED min.1µm	CuZn30	0-928924-1	R	0-927893-1
	N/A	N/A	3.3	3.1	1.8	3.0	2.2	1.2	3.65	3.6	2.0	3.0	2.8	1.2	0.65	0.3	6.2	4.6	3.0	B	Ø1.6 - 2.2 RB-Leitung	0.5 - 1.0 FLR	PRETINNED min.1µm	CuSn4	0-928923-5	S	0-927892-5
																				B			SEL. SILVER PLATED △3	CuSn4	0-928923-4	S	0-927892-4
																				A			PLAIN	CuSn4	0-928923-3	S	0-927892-3
																				B			SEL. GOLD PLATED △1 △2	CuSn4	0-928923-2	S	0-927892-2
																				B			PRETINNED min.1µm	CuZn30	0-928923-1	S	0-927892-1

NOTES:
Bemerkungen

△1 CONTACT AREA min.0.75 µm Au OVER min.1.25 µm Ni
Kontaktbereich min.0.75 µm Au über min.1.25 µm Ni

△2 CRIMP AREA 1-2 µm Sn OVER min.0.05 µm Ni
Crimpbereich 1-2 µm Sn über min.0.05 µm Ni

△3 Min.3 µm Ag IN LOCALIZED AREA, FLASH Ag ON REMAINDER, BOTH OVER min.1.25 µm Ni
Min.3 µm Ag im lokalisierte Bereich, Rest flashversilbert, beide über min.1.25 µm Ni

4 ALL VERSIONS SPLICE FREE EXCEPT OF △5
Alle Versionen Splice-free außer

△5 SPLICE ACCORDING TO TYCO-SPEC. 118-10107 SPLICE ADDITIONAL MARK WITH RED SPLICE-STICKER ON THE INTERLEAVING PAPER AND ON THE REEL
Splice nach Tyco-Spec. 118-10107 zusätzlich Splice mit rotem Splice-Aufkleber auf dem Zwischenlagenpapier und auf dem Reel kennzeichnen

△6 TO BE MEASURED BY DIMENSION 2 mm
Bei Ausstellung 2 mm

△7 REELING TYPE

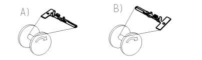

THIS DRAWING IS A CONTROLLED DOCUMENT FOR TYCO ELECTRONICS CORPORATION. IT IS SUBJECT TO CHANGE AND THE CONTROLLING ENGINEERING ORGANIZATION SHOULD BE CONTACTED FOR THE LATEST REVISION.

DIMENSIONS:	mm
TOLERANCES UNLESS OTHERWISE SPECIFIED:	ISO 2768 -H E; 0 PLC ± 0.2; 1 PLC ± 0.2; 2 PLC ± 0.2; 3 PLC ± -; 4 PLC ± -; ANGLES ± 1.5°
MATERIAL	see table / siehe Tabelle
FINISH	see table / siehe Tabelle
DWN	T. Konecny 21AUG2006
CHK	P.Hasek 6OCT2006
APVD	R.Vlcek 9OCT2006
PRODUCT SPEC	108-18299
APPLICATION SPEC	114-18014
WEIGHT	-
	tyco Electronics — tyco Electronics Czech s.r.o. CZ- K AMP 1293, 664 34 Kurim
NAME	PRODUCT GROUP DRAWING FOR 2.8 mm FASTIN-FASTON® TAB
SIZE	A
CAGE CODE	00779
DRAWING NO	C-1670467
RESTRICTED TO	-
	CUSTOMER DRAWING
SCALE	5:1
SHEET	1 OF 1
REV	A

AMP 4805 REV 31MAR2000

Downloaded from Elcodis.com electronic components distributor