Alle Rechte vorbehalten/ *All rights reserved*

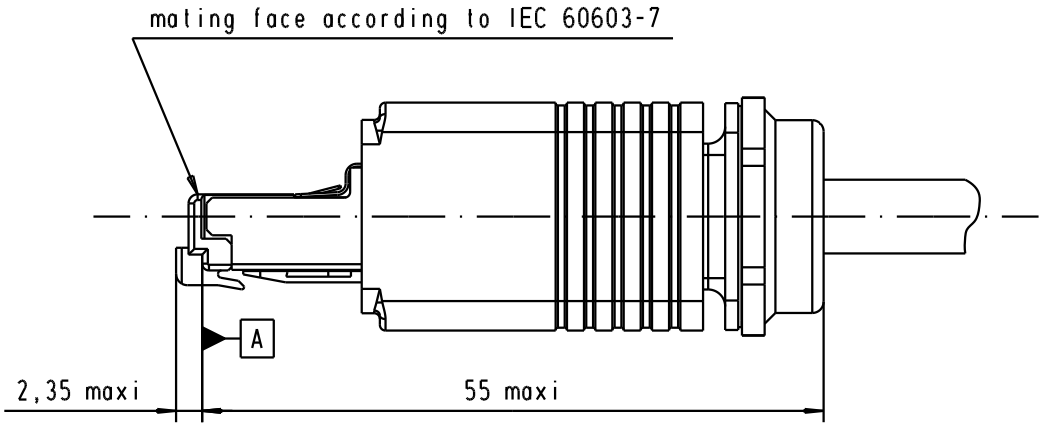

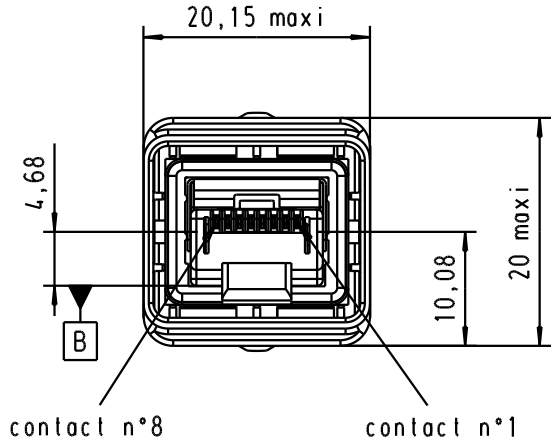

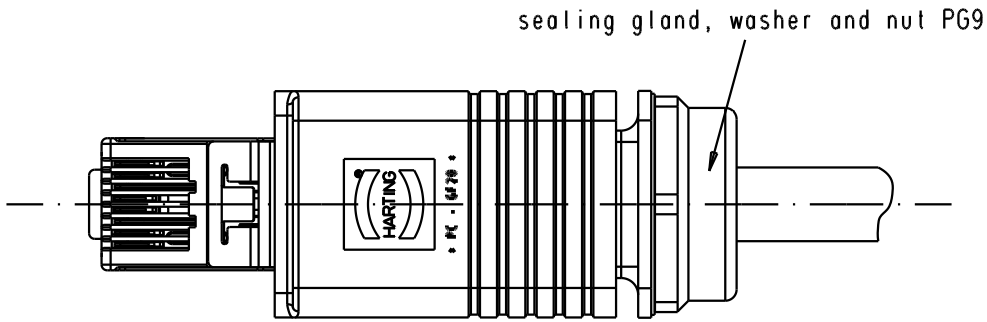

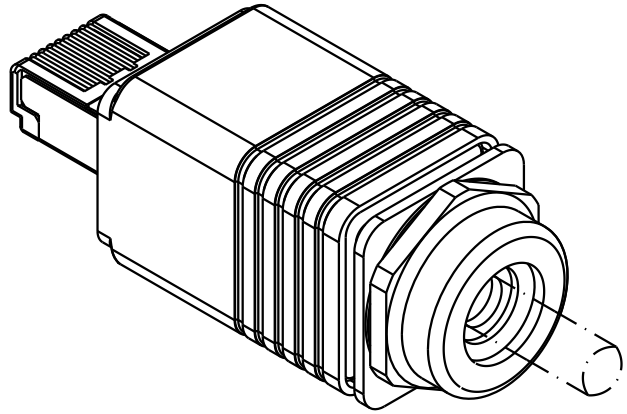

cable diameter: 6,5 to 7,2 mm
Stranded wire AWG 24-26

09 45 145 15 00	Au: 1,27 um over nickel
Part number	Data contact plating

Mod.	Dat.	Name
31869	17-Fev-04	AF

	Dat.	Name
Detail.	17-Fev-04	A. Fakhri
Insp.		
Stand.		

All Dim. in mm
Orig. Size DIN A 4

HARTING E.U.R.L
F-95972 Paris

RJ-Industrial
IP67 Push Pull Data Plug
Thermoplastic shielded
with 8 data contacts

Maßstab/ *Scale* 1,5:1

TB 09 45 145 1500

Sub.

Blatt/ *Page* 1/1