SPECIFICATIONS

Model	BDV-15JF	BDV-15KF
Rated voltage	12-24V DC	100V / 220V AC 50/60Hz
Operating range	10.8-26.4V DC	100V AC ±10% / 220V AC ±10%
Power consumption	Max. 4W	Max. 5W
Sound pressure level	87dB or more Measurement sound:-6dB 1kHz Sine wave 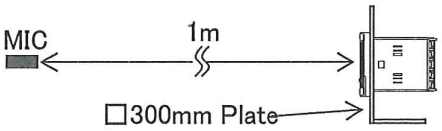 Measurement reference fig. * Sound pressure level may be lowered depending on the message and surrounding environment.	
Volume control	Adjustable range : Min～Max Sound reduction input : -10dB (Sound reduction mode only)	
Voice file	MPEG1-Audio Layer Ⅲ (MP3) Standard bit rate : 64kbit/s 、Fs=44.1kHz	
Maximum playing time	63sec (At playing of the standard bit rate data)	
Internal memory size	504KByte (Total of MP3 data)	
Voice rewrite Interface	SD card SD card Recommendation:SDV-128P(Sold separately)	
File format	FAT16	
Method of signal input	Pulse input width 100ms or more	
CH input	Bit input : Play mode A,C,E,G Binary input :Play mode B,D,F,H	
Number of playing messages	Bit input : 4 / Binary input : 15	
Warm-up time	Signal line start : 300ms or less / Power supply line start : 500ms or less	
CH priority	CH4＞CH3＞CH2＞CH1 (Bit input mode only)	
Operating temperature range	−10 ～ 50℃	
Relative humidity	Less than 85 %RH (Without the dew condensation)	
Mounting direction	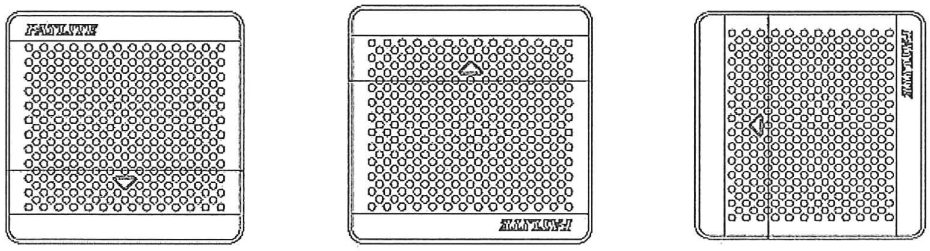 Upright Indoor : Y / Outdoor : Y Upside-down Indoor : Y / Outdoor : N Sideways Indoor : Y / Outdoor : N Mounting angle is vertical only. (Only upright when water splashes)	
Protection rating	IP 54 (Upright direction only)	
Insulation resistance	1MΩ or more (at 500V DC) between current-carrying and non-current-carrying part .	
Withstand voltage	500V AC (1 minute)	1500V AC (1 minute)
	(Between current-carrying and non-current-carrying part)	
Vibration resistance	Upright direction mounting :19.6m/s^2 30Hz Cross direction:2h・Horizontal direction:2h・Vertical direction:2h	
Mass	220g±10%	340g±10%

仕様書 09.9.15 株式会社パトライト 技術

BDV-.F-A18A-1/3	App.by	Chk.by	Drn.by
PATLITE Corporation	15 Sep '09	14 Sep'09	Y.Nakanishi 14 Sep '09

Downloaded from Elcodis.com electronic components distributor

SPECIFICATIONS

Play mode (Setting with operation mode switch)

factory default setting : A (If message registration is up to No.4) / B (If message registration is No.5 and above)

A Bit input mode	CH input : CH1 – CH4 Number of playing messages : 4
B Binary input mode	CH input : CH1 – CH4 Number of playing messages : 15
C Bit input・sound reduction mode	CH input : CH1 – CH3 Number of playing messages : 3 CH4 : Input reduces the volume by 10dB.
D Binary input・sound reduction mode	CH input : CH1 – CH3 Number of playing messages : 7 CH4 : Input reduces the volume by 10dB.
E Bit input・Latest input priority play mode	CH input : CH1 – CH4 Number of playing messages : 4 When the next message is input while message is being play, the message that is being played is stopped and the latest input message is playing.
F Binary input・Latest input priority play mode	CH input : CH1 – CH4 Number of playing messages : 15 When the next message is input while message is being play, the message that is being played is stopped and the latest input message is playing.
G Bit input・Hold play mode	CH input : CH1 – CH4 Number of playing messages : 4 Message play is possible only while the input is held. The play stops when the input stops.
H Binary input・Hold play mode	CH input : CH1 – CH4 Number of playing messages : 15 Message play is possible only while the input is held. The play stops when the input stops.
I～P Test mode	The message No.1 plays.

Notes

・This product complies with the RoHS Directive(DIRECTIVE 2002/95/EC) .

・Type BDV-15JF complies with EC Directive(EMC Directive) and CE Marking is indicated .

BDV － 15JF － J

■Rated Voltage
J:12-24V DC
K:100V/220V AC

■Color
J:Light gray
K:Dark gray

仕様書
09.9.15
株式会社パトライト 技術

～Caution on copyright～

If a work that was recorded or copied from music CDs or other media is used at public places, law enforcement for copyright infringement may be imposed. When using a work that was recorded or copied from music CDs or other media, be sure to obtain permission from the author. In addition, the copyright of audio/music data which are distributed or sold by PATLITE Corporation belongs to PATLITE. It is strictly prohibited to copy/reprint the partial or whole contents of audio/music data of PATLITE Corporation or to transfer/sell them on computer networks etc. without the permission of the right holder.

PATLITE Corporation

Downloaded from Elcodis.com electronic components distributor

指定外公差 General tolerance	角度公差 Angular tolerance ±[°]					寸法公差 Dimensional tolerance ±[mm]						符号 Sym.	年月日 Date	訂正履歴 Revisions	記印 Sgn.	検印 Chk.	承認 App.
	短辺長さ Length of short side	~10	~50	~100	100		~6	~30	~120	~300	1000	△-					
	精 f	1	0.5	0.3	0.1	精 f	0.05	0.1	0.2	0.4	0.6	△-					
	粗 v	3	1.5	1	0.5	中 m	0.1	0.3	0.5	0.7	1	△-					
						粗 c	0.3	0.5	1	1.2	2	△-					

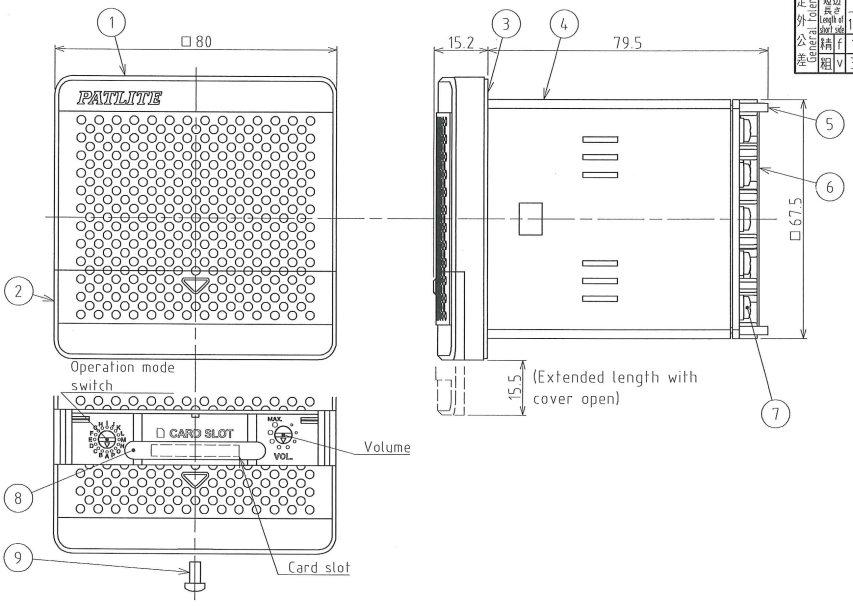

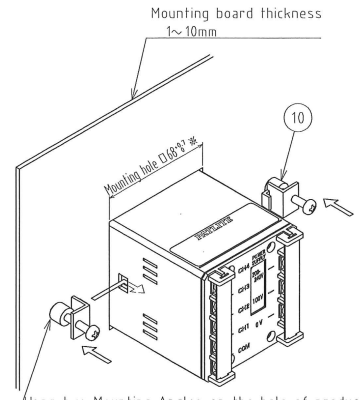

Hang two Mounting Angles on the hole of product's side face and tighten it's screws after inserting product in mounting hole. (Recommended tightening torque 0.7±0.1N·m)

※Mounting hole dimension complies with IEC-61554(DIN-43700).

How to install

仕様書 09.9.15 技術 株式会社パトライト

Wiring when NPN transistor is used

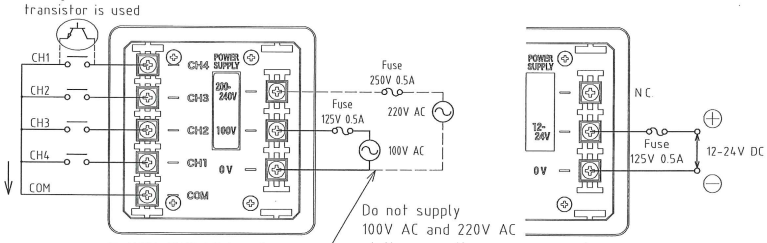

■ BDV-15KF Wiring diagram

■ BDV-15JF Wiring diagram (The signal line is the same as BDV-15KF)

Signal line contact capacity	
Current capacity	10mA or more
Dielectric voltage-withstand	20VDC or more
Leak current	0.1mA or less
ON voltage(Vsat)	1V or less

＊Do not supply a voltage for the signal line. Failure to do so may be damaged to the product.

番号 No.	部品名 Part Name	品目コード Part No.	数量 Qty.	材料 & 寸法 & 処理 Material & Size & Finish	記事 Remarks
10	Mounting Angle		2	Accessory	
9	+Pan Head Screw		1	M3X6 For Front Cover Mounting	
8	Slot Waterproof Rubber		1	EPDM	
7	+-Pan Head Screw With Square Washer		8	M3X6 For Wiring	
6	Terminal Cover		2	PC t=0.38	
5	Rear Cover		1	ABS Dark Gray	
4	Case		1	ABS Dark Gray	
3	Waterproof Sheet		1	CR t=1.0	
2	Front Cover		1	ABS Light Gray/Dark Gray	
1	Front Panel		1	ABS Light Gray/Dark Gray	

設計 Dgn.by	製図 Drn.by	検図 Chk.by	承認 App.by	図名 Name	機種名 Model	特注No. S.P.No.
T.Koma 16 Jun '09	Y.Nakanishi 14 Sep '09	[signature] 15 Sep '09	[signature] 15 Sep '09	Specifications Dimensions	BDV-15JF/KF	
					品目コード Part No.	
三角法 3rd Angle P.	単位 Unit mm	尺度 Scale —		株式会社パトライト PATLITE Corporation	図番 Drawing No. BDV-.F-A18A-3/3	

Downloaded from Elcodis.com electronic components distributor