MICRO SWITCH
FREEPORT, ILLINOIS, U.S.A.
A DIVISION OF HONEYWELL
FED. MFG. CODE 91929

PACKET

CATALOG LISTING
6PA341

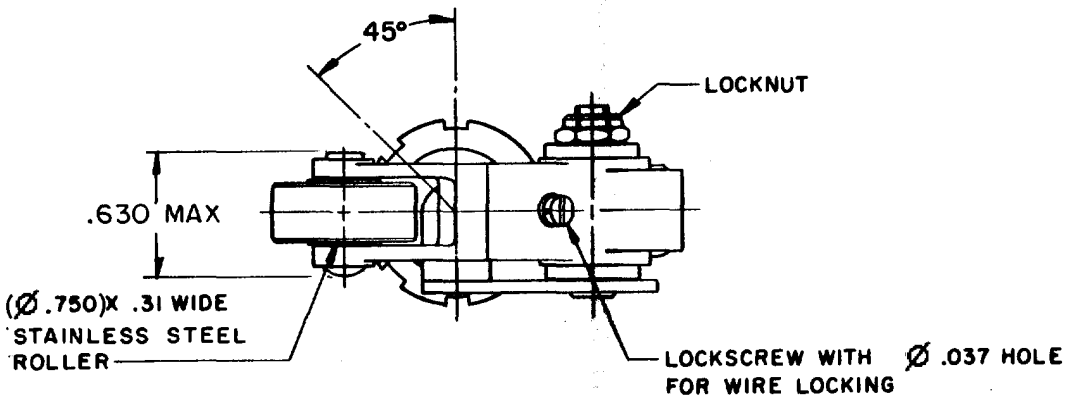

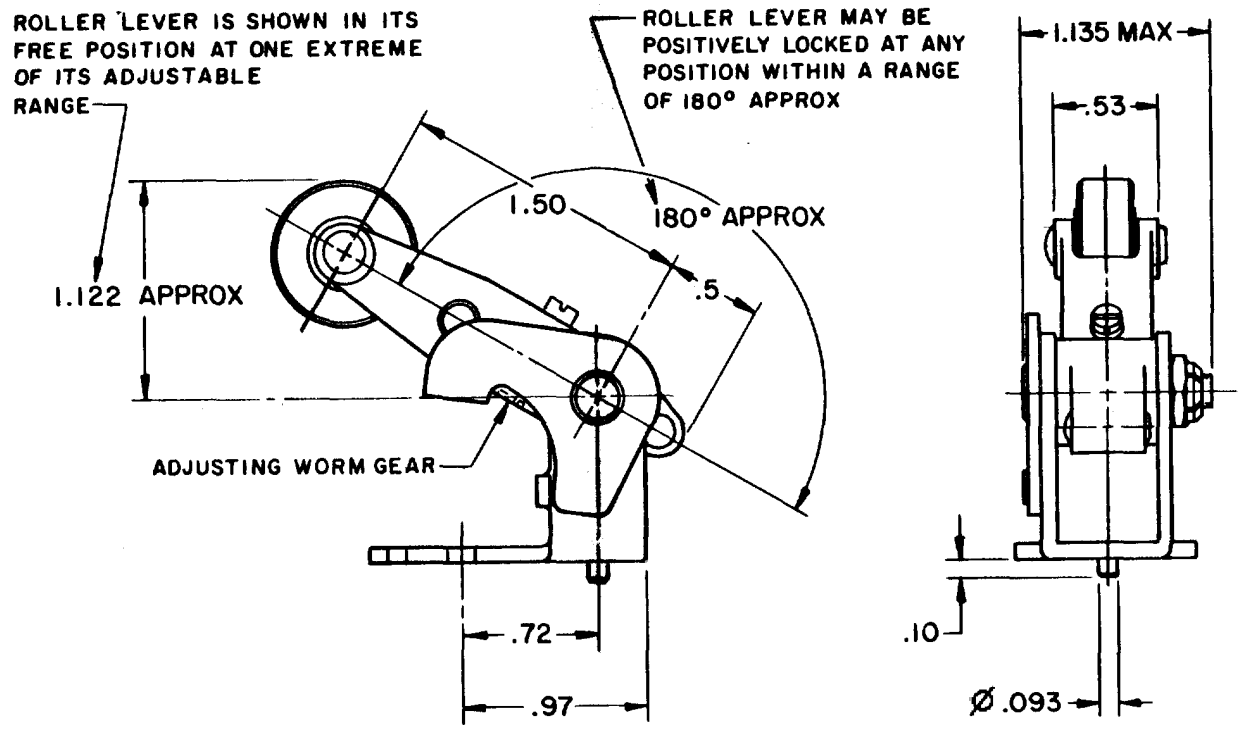

NOTE –
1 - UNIT DESIGNED TO WITHSTAND TEMPERATURE OF 600° F
2 - REPLACEMENT ARM IS PART NO. 6PA358
3- 1X LOCKWASHER, 1X HEX NUT, AND 7X PLAIN WASHER FURNISHED UNASSEMBLED

ANSI Y14.5M-1982 APPLIES

THIS DRAWING COVERS A PROPRIETARY ITEM AND IS THE PROPERTY OF MICRO SWITCH, A DIVISION OF HONEYWELL. THIS DRAWING IS NOT TO BE COPIED OR USED WITHOUT THE APPROVAL OF MICRO SWITCH.

CHARACTERISTICS	ELECTRICAL DATA	SCALE
	CONTACT ARRANGEMENT	DO NOT SCALE PRINT
		UNLESS OTHERWISE NOTED DIMENSIONS ARE IN INCHES TOLERANCES ARE: ONE PLACE (.0) ±.030 TWO PLACE (.00) ±.015 THREE PLACE (.000) ±.005 ANGLES ±5°
		WEIGHT

DRAWING NUMBER: 6PA341
RELEASE NO. ETS SR 12605 REPLACES
ISSUE 7
CHECK
REVISIONS
A SR12605 OMW 13 DEC 66
B C022377 MBF 12 JAN 67
C C026688 MBS 12 JAN 70
D C095373 JAH 13 JUL 99
CHECK LCO 9 Dec 66
CHECK 66
DRAWN OMW 9 DEC 66
FORMTEK FO-50378

Downloaded from Elcodis.com electronic components distributor