Military Purpose Toggle Switches

DESCRIPTION

Eaton's Military Purpose switches are designed to meet the requirements of MIL-S-83731 or JAN-S-23. Sealed Switches have a silicone rubber lever seal assembled between the lever and the bushing to resist the entrance of contaminants such as dust, sand or water into the contact structure.

The switch mechanisms are completely enclosed to resist the entrance of contaminants into the switch. All metal parts are plated to resist corrosion. The Heavy Duty Switches are offered in both Standard Toggle Lever and Lever Lock versions. Circuit designations are stamped on the side of each switch.

SPECIFICATIONS

Ratings:

See selection table.

Circuits:

1PST, 1PDT, 2PST, 2PDT, 1P3T (ON-ON-ON), 4PST and 4PDT.

Maintained and momentary action.

Contact Action:

Heavy Duty

Slow-make/Slow-break butt contact.

Medium Duty

Quick-make/Quick break, wiping action.

Contact Material:

Heavy Duty

Movable — Silver plated copper with fine or coin silver contact face button.

Stationary — Copper with fine or coin silver contact face button.

Medium Duty

Movable — Copper silver plated.

Stationary — Bronze silver plated.

AC/DC RATED (MEDIUM DUTY) MIL-S-83731 SWITCHES SELECTION TABLE

(**BOLD** FACE TYPE INDICATES ITEMS NORMALLY IN DISTRIBUTOR STOCK)

Rating	Poles and Throw	Circuit with Toggle in: UP Position	CENTER Position	DOWN Position (Keyway)	BASE CIRCUIT SEE PAGE 4.28	Dimension "A" mm (inches)	Dimension "B" mm (inches)	CATALOG NUMBERS: Military or JAN (ST) Solder Lug Terminals: MIL-S-83731 With Sealed Lever	Catalog Number
SINGLE POLE							**SINGLE POLE**		
❶	1 P.S.T.	ON	NONE	OFF	A	—	23.01 (.906)	MS25098-22	**8261K22**
❶		ON	NONE	OFF*		—	23.01 (.906)	MS25098-29	8261K29
❶		OFF	NONE	ON*		—	23.01 (.906)	MS25098-30	8261K30
❶	1 P.D.T.	ON	NONE	ON	B	23.80 (.937)	—	MS25098-23	**8261K23**
❶		ON	NONE	ON*		23.80 (.937)	—	MS25098-26	8261K26
DOUBLE POLE							**DOUBLE POLE**		
❷	2 P.S.T.	ON	NONE	OFF	C	—	23.01 (.906)	MS25100-22	**8262K22**
❷		ON	NONE	OFF*		—	23.01 (.906)	MS25100-29	8262K29
❷		OFF	NONE	ON*		—	23.01 (.906)	MS25100-30	**8262K30**
❸	2 P.D.T.	ON	NONE	ON	D	23.80 (.937)	—	MS25100-23	**8262K23**
❸		ON	NONE	ON*		23.80 (.937)	—	MS25100-26	8262K26

* Momentary Contact.

CURRENT RATINGS

Code From Selection Table	Part Number	CURRENT CAPACITY IN AMPERES PER POLE, 125V ac, 60 Hz: Resistive Load	Inductive Load
❶	All MS25098	3.0	1.5
❷	MS25100-22, 29, 30	3.0	1.5
❸	MS25100-23, 26	1.0	1.0

Downloaded from Elcodis.com electronic components distributor

Terminal Types:

Heavy Duty
MIL-S-83731 Types

Screw Terminals — Brass designed to accept #6-32 x 6.35mm (.250″) pan head **(Cat. No. 11-1893)** screws and Si bronze #6 Helical lockwasher **(Cat. No. 16-1096).** Furnished unassembled. Terminal screws are tin dipped to facilitate soldering if required.

Heavy Duty Jan-S-23 Types

Screw Terminals — Brass designed to accept #6-32 x 4.78mm (.188″) binding head **(Cat. No. 811-2)** screws. Furnished unassembled.

Solder Lug Terminals — Tintillate plated brass.

Medium Duty
MIL-S-83731 Types

Solder Lugs — Brass silver plated furnished with 2.39mm (.094″) dia. hole.

Base Material:

Thermoset molding material.

Mounting Means:

Threaded Bushing — 11.89mm (.468″)dia., 32 threads/inch.

Keyway — 1.73 x .89mm deep (.068 x .035″ deep) — provides anti-rotation feature.

Hardware Supplied —

MIL-S-83731 Types:

2 hexagon facenuts **(Cat. No. 15-966-6)**, 1 locking ring **(Cat. No. 29-761)** and 1 internal tooth lockwasher **(Cat. No. 16-886).** Furnished unassembled.

Jan-S-23 Types:

2 hexagon facenuts **(Cat. No. 15-966-6)**. Furnished unassembled.

Dielectric:

1000V RMS minimum.

Operating Temperature Range:

-17.8°C to +65.6°C (0°F 10 +150°F).

DIMENSIONS APPROXIMATE IN MM (INCHES)

1PDT MAINTAINED ACTION (SOLDER LUG)

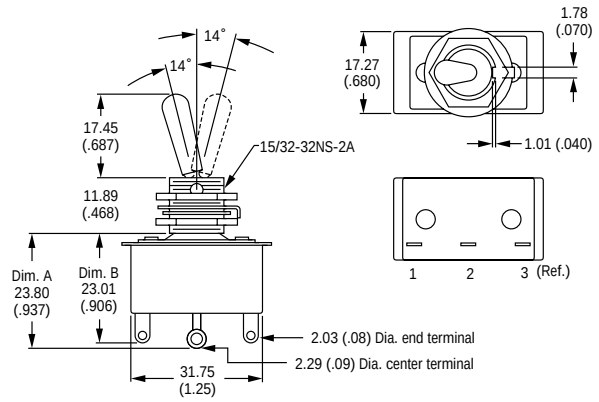

2PDT MAINTAINED ACTION (SOLDER LUG)

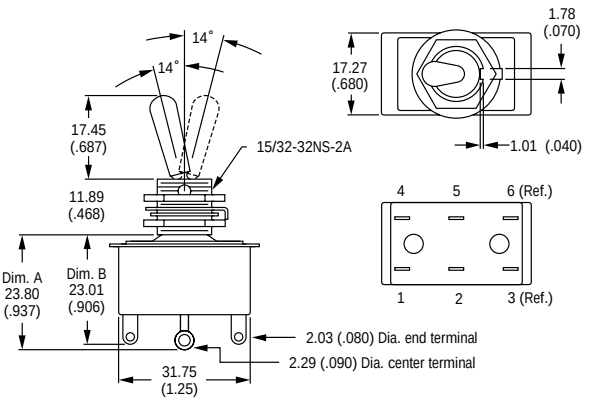

8261K22
Medium Duty

8262K22
Medium Duty

8801K22
Heavy Duty

8820K16
Heavy Duty

Downloaded from Elcodis.com electronic components distributor

Military Purpose Toggle Switches (continued)

AC Rated (Heavy Duty) MIL-S-83731 Switches with Lever Seal

AC RATED (HEAVY DUTY) MIL-S-83731 SWITCHES SELECTION TABLE

(**BOLD** FACE TYPE INDICATES ITEMS NORMALLY IN DISTRIBUTOR STOCK)

Rating	Poles and Throw	Circuit with Toggle in: UP Position	CENTER Position	DOWN Position (Keyway)	BASE CIRCUIT SEE PAGE 4.28	Bushing Length "A" mm (inches)	Lever Length "B" mm (inches)	CATALOG NUMBERS: Screw Terminals with Sealed Lever: MS Part Number	Catalog Number
ONE POLE							**ONE POLE**		
❶	1 P. S.T.	ON	NONE	OFF	A	11.89 (.468)	17.45 (.687)	MS35058-22	**8801K22**
❶		ON	OFF	NONE		11.89 (.468)	17.45 (.687)	MS35058-24	**8801K23**
❷		ON	NONE	OFF*		11.89 (.468)	17.45 (.687)	MS35058-29	**8813K17**
❷		ON	OFF*	NONE		11.89 (.468)	17.45 (.687)	MS35058-25	**8813K18**
❷		NONE	OFF	ON*		11.89 (.468)	17.45 (.687)	MS35058-28	**8811K18**
❷		OFF	NONE	ON*		11.89 (.468)	17.45 (.687)	MS35058-30	**8811K17**
❶	1 P. D.T.	ON	OFF	ON	B	11.89 (.468)	17.45 (.687)	MS35058-21	**8800K16**
❶		ON	NONE	ON		11.89 (.468)	17.45 (.687)	MS35058-23	**8810K15**
❷		ON	NONE	ON*		11.89 (.468)	17.45 (.687)	MS35058-26	**8804K13**
❷		ON*	OFF	ON*		11.89 (.468)	17.45 (.687)	MS35058-27	**8812K14**
❷		ON	OFF	ON*		11.89 (.468)	17.45 (.687)	MS35058-31	**8809K16**
TWO POLE							**TWO POLE**		
❸	2 P. S.T.	ON	NONE	OFF	C	11.89 (.468)	17.45 (.687)	MS35059-22	**8822K20**
❸		ON	OFF	NONE		11.89 (.468)	17.45 (.687)	MS35059-24	**8822K21**
❹		ON	NONE	OFF*		11.89 (.468)	17.45 (.687)	MS35059-29	**8828K13**
❹		ON	OFF*	NONE		11.89 (.468)	17.45 (.687)	MS35059-25	**8828K12**
❹		NONE	OFF	ON*		11.89 (.468)	17.45 (.687)	MS35059-28	**8826K14**
❹		OFF	NONE	ON*		11.89 (.468)	17.45 (.687)	MS35059-30	**8826K15**
❸	2 P. D.T.	ON	OFF	ON	D	11.89 (.468)	17.45 (.687)	MS35059-21	**8820K16**
❸		ON	NONE	ON		11.89 (.468)	17.45 (.687)	MS35059-23	**8824K14**
❹		ON	NONE	ON*		11.89 (.468)	17.45 (.687)	MS35059-26	**8830K13**
❹		ON*	OFF	ON*		11.89 (.468)	17.45 (.687)	MS35059-27	**8834K5**
❹		ON	OFF	ON*		11.89 (.468)	17.45 (.687)	MS35059-31	**8832K6**
❺	1 P. 3.T in a 2P Base	ON ❽	ON ❾	ON ❿	See Diagram On Page 4.28	11.89 (.468)	17.45 (.687)	MS25201-4	**8860K4**
❺		ON ❽	ON ❾	ON* ❿		11.89 (.468)	17.45 (.687)	MS25201-5	**8860K5**
❺		ON* ❽	ON ❾	ON* ❿		11.89 (.468)	17.45 (.687)	MS25201-6	**8860K6**
❺		ON ❽	ON ⓫	ON ❿		11.89 (.468)	17.45 (.687)	MS25201-7	**8860K7** ⓬
❺		ON ❽	ON ⓫	ON* ❿		11.89 (.468)	17.45 (.687)	MS25201-8	**8860K8** ⓬
❺		ON* ❽	ON ⓫	ON* ❿		11.89 (.468)	17.45 (.687)	MS25201-9	**8860K9** ⓬
FOUR POLE							**FOUR POLE**		
❻	4 P. S.T.	ON	NONE	OFF	E	11.89 (.468)	17.45 (.687)	—	**7660K12**
❻		ON	OFF	NONE		11.89 (.468)	17.45 (.687)	MS25068-24	7660K13
❼		ON	OFF*	NONE		11.89 (.468)	17.45 (.687)	MS25068-25	**7668K7**
❼		NONE	OFF	ON*		11.89 (.468)	17.45 (.687)	MS25068-28	7666K9
❼		OFF	NONE	ON*		11.89 (.468)	17.45 (.687)	—	**7666K6**
❻	4 P. D.T.	ON	OFF	ON	F	11.89 (.468)	17.45 (.687)	MS25068-21	7662K7
❻		ON	NONE	ON		11.89 (.468)	17.45 (.687)	MS25068-23	7664K5
❼		ON	NONE	ON*		11.89 (.468)	17.45 (.687)	MS25068-26	**7674K5**
❼		ON*	OFF	ON*		11.89 (.468)	17.45 (.687)	MS25068-27	**7672K5**
❼		ON	OFF	ON*		11.89 (.468)	17.45 (.687)	MS25068-31	7670K6

* Momentary Contact.

CURRENT RATINGS

Code From Selection Table	Switch	Type of Operation	CURRENT CAPACITY IN AMPERES PER POLE: 28V dc Lamp Load	28V dc Resistive Load	28V dc Inductive Load	115V ac, 60 Hz Lamp Load	115V ac, 60 Hz Resistive Load	115V ac, 60 Hz Inductive Load	115V ac, 400 Hz Lamp Load	115V ac, 400 Hz Resistive Load	115V ac, 400 Hz Inductive Load
❶	MS35058	Maintained	7	25	15	—	10	10	3	10	10
❷		Momentary	5	20	10	—	10	7	—	—	—
❸	MS35059	Maintained	7	20	15	—	20	—	4	20	15
❹		Momentary	5	18	10	—	11	—	—	—	—
❺	MS25201	ON-ON-ON	5	18	10	2	11	8	2	11	8
❻	MS25068	Maintained	5	20	12	—	—	—	4	20	15
❼		Momentary	4	18	10	—	—	—	2	11	5

❽ Across terminals 2-3 and 5-6.
❾ Across terminals 1-2 and 5-6.
❿ Across terminals 1-2 and 4-5.
⓫ Across terminals 2-3 and 4-5.
⓬ For "INDEPENDENT ON-ON-ON" circuit arrangement see page 4.28.

Downloaded from Elcodis.com electronic components distributor