Type: 1658

Very cost effective design to meet international requirements. No exposed metal parts which are, or could become, current-carrying except for terminals. R-type TO CBE to EN 60934.
- Manual reset, cycling trip free mechanism
- Extremely small and lightweight
- UL, CSA, VDE and EN 60934 (IEC 60934) approved

Voltage rating:

- AC 240 V
- DC 28 V

Current ratings:

from 5 A to 30 A

Number of poles:

single pole

Mounting method:

threadneck
flange

Terminal design:

blade terminals
screw terminals

Actuation:

push button

Auxiliary contacts:

without auxiliary contacts

Water splash protection:

with water splash protection
without water splash protection

Illumination:

without illumination

Typical life:

5...16 A 1,000 operations at 2 x I_N, inductive
17...25 A 1,000 operations at 2 x I_N, resistive

Interrupting capacity I_{cn}:

5...7 A: 180 A
8...30 A: 200 A

Approvals:

VDE, UL

Dimensions

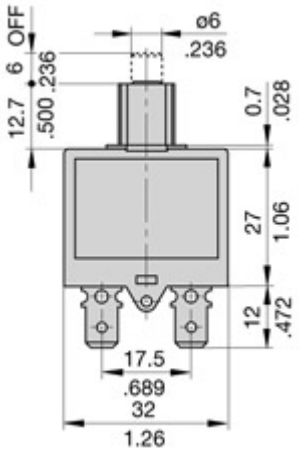

Internal connection diagrams

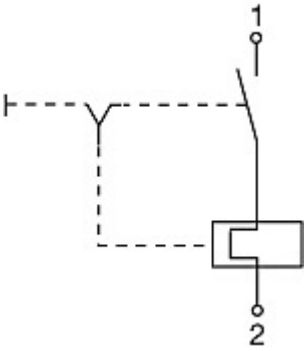

Thermal Overcurrent Circuit Breaker 1658-...

Description

Very cost effective design to meet international requirements. No exposed metal parts which are, or could become, current-carrying except for terminals. R-type TO CBE to EN 60934.

- Manual reset, cycling trip free mechanism
- Extremely small and lightweight
- UL, CSA, VDE and EN 60934 (IEC 60934) approved

Typical applications

Battery chargers, consumer products, power supplies, motors.

1658-...

Ordering information

Type No.	
1658	single pole thermal circuit breaker
Threadneck design	
G21	manual reset type, 3/8"-27 threadneck
G41	manual reset type, 7/16"-28 threadneck
A21	auto reset type, 3/8"-27 threadneck
A41	auto reset type, 7/16"-28 threadneck
A00	auto reset type, without threadneck
F01	snap in
Hardware	
00	no hardware
01	one PAL nut, bulk
02	one PAL nut, one knurled nut, bulk
03	one PAL nut mounted
04	one PAL nut, one knurled nut, mounted
05	one PAL nut mounted, one knurled nut, bulk
06	one knurled nut, bulk
07	one hex nut, bulk
08	two hex nuts, bulk
Terminals	
P10	blade terminals A6.3-0.8 (QC .250)
P13	blade terminals A6.3-0.8 (QC .250), 90°
S80	straight screw terminals*
S83	90° bent screw terminals*
Current ratings	
5 ...30 A	

1658 - G21 - 02 - P10 - 5 A Ordering example

* Screws and lock washers bulk shipped

Technical data

For further details please see chapter: Technical Information		
Voltage rating	AC 240 V; DC 28 V	
Current ratings	5...30 A	
Typical life AC + DC	5...16 A	1,000 operations at 2 x I_N, inductive
	17...25 A	1,000 operations at 2 x I_N, resistive
Ambient temperature	-20...+60 °C (-4...+140 °F), ≤ 7 A max. +40 °C (+104 °F)	
Insulation co-ordination (IEC 60664 and 60664 A)	rated impulse withstand voltage 2.5 kV	pollution degree 2
	reinforced insulation in operating area	
Dielectric strength (IEC 60664 and 60664A) operating area	test voltage AC 3,000 V	
Insulation resistance	> 100 MΩ (DC 500 V)	
Interrupting capacity I_{cn}	5...7 A	180 A
	8...30 A	200 A
Interrupting capacity (UL 1077/EN 60934 PC1)	I_N / U_N	
	5...16 A AC 240 V	2,000 A
	18...30 A AC 120 V	2,000 A
	5...30 A DC 32 V	2,500 A
	5...30 A DC 28 V	2,000 A (1658-A..)
Degree of protection (IEC 60529/DIN 40050)	operating area IP40 terminal area IP00	
Vibration	8 g (57-500 Hz) ± 0.61 mm (10-57 Hz), to IEC 60068-2-6, test Fc, 10 frequency cycles/axis	
Shock	30 g (11 ms) to IEC 60068-2-27, test Ea	
Corrosion	96 hours at 5 % salt mist, to IEC 60068-2-11, test Ka	
Humidity	240 hours at 95 % RH to IEC 60068-2-78, test Cab	
Mass	approx. 16 g	

Standard current ratings and typical voltage drop values

Current rating (A)	Voltage drop (mV)	Current rating (A)	Voltage drop (mV)
5	≤ 150	12	≤ 140
6	≤ 150	15	≤ 240
7	≤ 150	16	≤ 240
8	≤ 150	20	≤ 240
9	≤ 150	25	≤ 240
10	≤ 140	30	≤ 240

Approvals

Authority	Voltage rating	Current ratings	
VDE (EN 60934)	AC 240 V; DC 28 V	5...25 A	
UL	AC 240 V	5...16 A	1658-G../F..
	AC 120 V	18...30 A	1658-G../F..
	AC 120 V	5...30 A	1658-A...
	DC 32 V	5...30 A	1658-G../F..
	DC 28 V	5...30 A	1658-A..

Dimensions

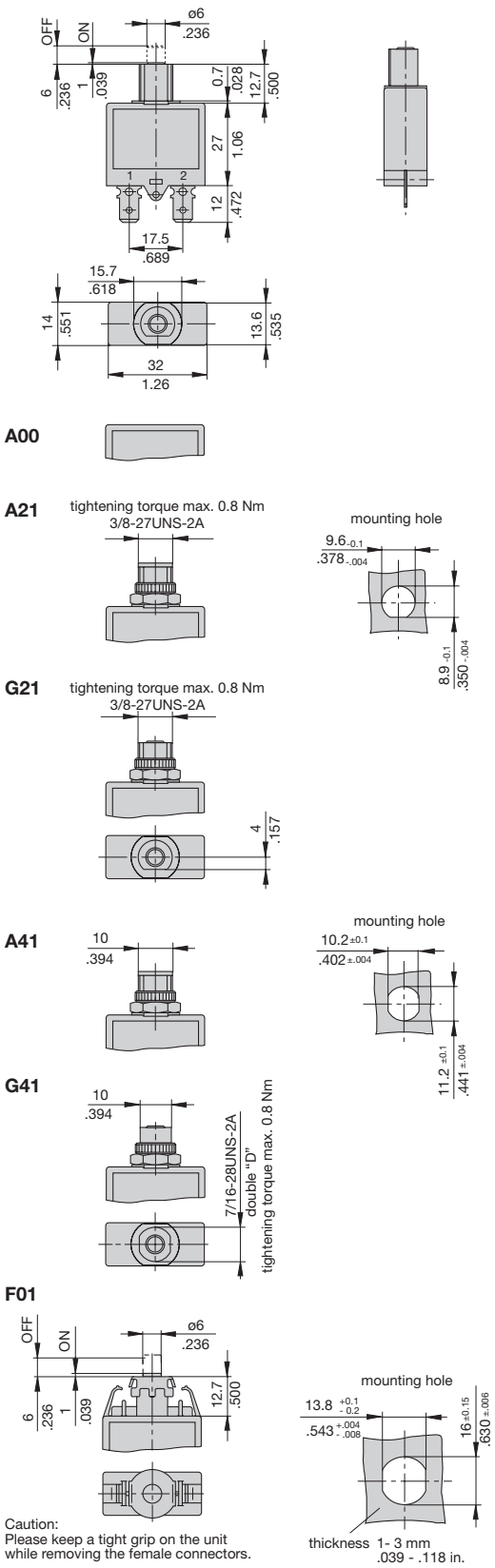

Caution:
Please keep a tight grip on the unit while removing the female connectors.

See ordering information for mounting hardware.

Terminal design

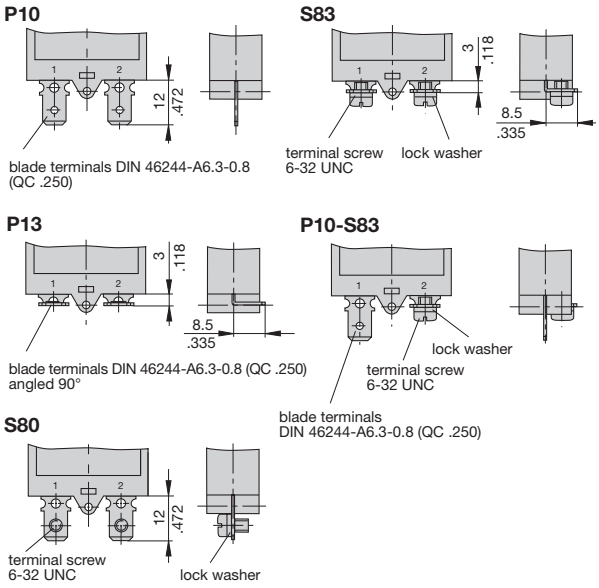

Installation drawing

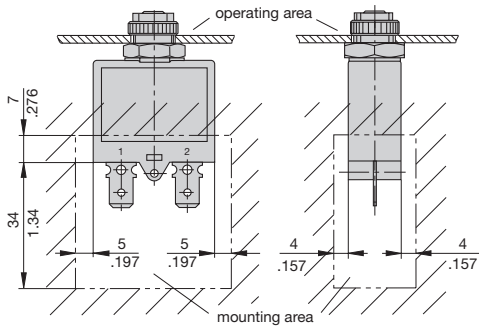

This is a metric design and millimeter dimensions take precedence ($\frac{mm}{inch}$)