KEMET

FEATURES

- C0G (NP0), X7R, X5R, Z5U and Y5V Dielectrics
- 10, 16, 25, 50, 100 and 200 Volts
- Standard End Metalization: Tin-plate over nickel barrier
- Available Capacitance Tolerances: ±0.10 pF; ±0.25 pF; ±0.5 pF; ±1%; ±2%; ±5%; ±10%; ±20%; and +80%-20%
- Tape and reel packaging per EIA481-1. (See page 92 for specific tape and reel information.) Bulk Cassette packaging (0402, 0603, 0805 only) per IEC60286-6 and EIAJ 7201.
- RoHS Compliant

CAPACITOR OUTLINE DRAWINGS

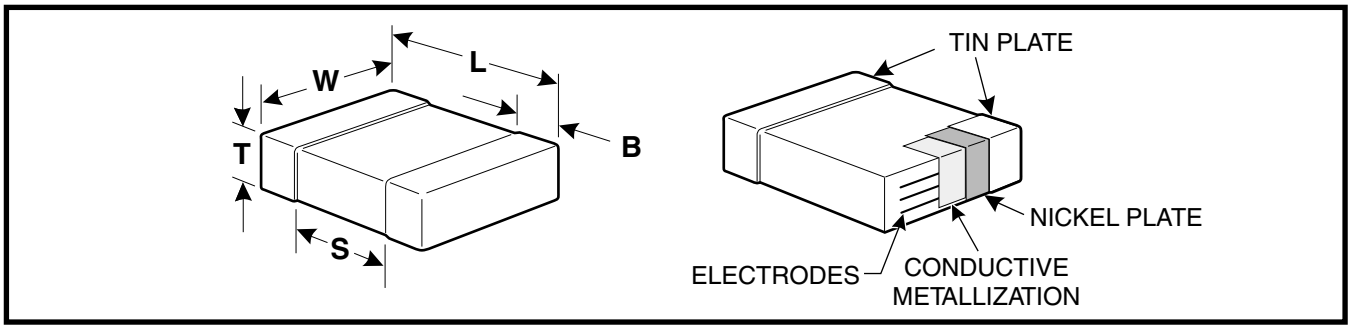

DIMENSIONS—MILLIMETERS AND (INCHES)

EIA SIZE CODE	METRIC SIZE CODE	L - LENGTH	W - WIDTH	T THICKNESS	B - BANDWIDTH	S SEPARATION minimum	MOUNTING TECHNIQUE
0201*	0603	0.6 (.024) ± .03 (.001)	0.3 ± (.012) ± .03 (.001)	See page 77 for thickness dimensions.	0.15 (.006) ± .05 (.002)	N/A	Solder Reflow
0402*	1005	1.0 (.04) ± .05 (.002)	0.5 (.02) ± .05 (.002)		0.20 (.008) -.40 (.016)	0.3 (.012)	
0603	1608	1.6 (.063) ± .15 (.006)	0.8 (.032) ± .15 (.006)		0.35 (.014) ± .15 (.006)	0.7 (.028)	Solder Wave + or Solder Reflow
0805*	2012	2.0 (.079) ± .20 (.008)	1.25 (.049) ± .20 (.008)		0.50 (.02) ± .25 (.010)	0.75 (.030)	
1206*	3216	3.2 (.126) ± .20 (.008)	1.6 (.063) ± .20 (.008)		0.50 (.02) ± .25 (.010)	N/A	
1210*	3225	3.2 (.126) ± .20 (.008)	2.5 (.098) ± .20 (.008)		0.50 (.02) ± .25 (.010)	N/A	
1812	4532	4.5 (.177) ± .30 (.012)	3.2 (.126) ± .30 (.012)		0.60 (.024) ± .35 (.014)	N/A	Solder Reflow
1825*	4564	4.5 (.177) ± .30 (.012)	6.4 (.252) ± .40 (.016)		0.60 (.024) ± .35 (.014)	N/A	
2220	5650	5.6 (.220) ± .40 (.016)	5.0 (.197) ± .40 (.016)		0.60 (.024) ± .35 (.014)	N/A	
2225	5664	5.6 (.220) ± .40 (.016)	6.3 (.248) ± .40 (.016)		0.60 (.024) ± .35 (.014)	N/A	

* Note: Indicates EIA Preferred Case Sizes (Tightened tolerances apply for 0402, 0603, and 0805 packaged in bulk bassette, see page 96.)
\+ For extended value 1210 case size - solder reflow only.

CAPACITOR ORDERING INFORMATION (Standard Chips - For Military see page 90)

C 0805 C 103 K 5 R A C*

CERAMIC

SIZE CODE

SPECIFICATION
C - Standard

CAPACITANCE CODE
Expressed in Picofarads (pF)
First two digits represent significant figures.
Third digit specifies number of zeros. (Use 9 for 1.0 through 9.9pF. Use 8 for 0.5 through 0.99pF)
(Example: 2.2pF = 229 or 0.50 pF = 508)

CAPACITANCE TOLERANCE

B – ±0.10pF	J – ±5%
C – ±0.25pF	K – ±10%
D – ±0.5pF	M – ±20%
F – ±1%	P – (GMV) – special order only
G – ±2%	Z – +80%, -20%

VOLTAGE

1 - 100V	3 - 25V
2 - 200V	4 - 16V
5 - 50V	8 - 10V
7 - 4V	9 - 6.3V

TEMPERATURE CHARACTERISTIC
Designated by Capacitance Change Over Temperature Range
G – C0G (NP0) (±30 PPM/°C)
R – X7R (±15%) (-55°C + 125°C)
P– X5R (±15%) (-55°C + 85°C)
U – Z5U (+22%, -56%) (+10°C + 85°C)
V – Y5V (+22%, -82%) (-30°C + 85°C)

FAILURE RATE LEVEL
A- Not Applicable

END METALLIZATION
C-Standard (Tin-plated nickel barrier)

*** Part Number Example: C0805C103K5RAC (14 digits - no spaces)**

Downloaded from Elcodis.com electronic components distributor

C0G CAPACITANCE RANGE – 0402, 0603, 0805, 1206

Cap	Cap	Cap	C0201*	C0402*				C0603*						C0805*						C1206*					
pF	Code	Tol.	25V	10V	16V	25V	50V	10V	16V	25V	50V	100V	200V	10V	16V	25V	50V	100V	200V	10V	16V	25V	50V	100V	200V
0.50	508	C,D		BB	BB	BB	BB	CB	CB	CB	CB	CB	CB	DC	DC	DC	DC	DC	DC						
0.75	758	C,D		BB	BB	BB	BB	CB	CB	CB	CB	CB	CB	DC	DC	DC	DC	DC	DC						
1.0	109	C,D		BB	BB	BB	BB	CB	CB	CB	CB	CB	CB	DC	DC	DC	DC	DC	DC	EB	EB	EB	EB	EB	EB
1.1	119	C,D		BB	BB	BB	BB	CB	CB	CB	CB	CB	CB	DC	DC	DC	DC	DC	DC	EB	EB	EB	EB	EB	EB
1.2	129	C,D		BB	BB	BB	BB	CB	CB	CB	CB	CB	CB	DC	DC	DC	DC	DC	DC	EB	EB	EB	EB	EB	EB
1.5	159	C,D		BB	BB	BB	BB	CB	CB	CB	CB	CB	CB	DC	DC	DC	DC	DC	DC	EB	EB	EB	EB	EB	EB
1.6	169	C,D		BB	BB	BB	BB	CB	CB	CB	CB	CB	CB	DC	DC	DC	DC	DC	DC	EB	EB	EB	EB	EB	EB
1.8	189	C,D		BB	BB	BB	BB	CB	CB	CB	CB	CB	CB	DC	DC	DC	DC	DC	DC	EB	EB	EB	EB	EB	EB
2.0	209	C,D		BB	BB	BB	BB	CB	CB	CB	CB	CB	CB	DC	DC	DC	DC	DC	DC	EB	EB	EB	EB	EB	EB
2.2	229	C,D		BB	BB	BB	BB	CB	CB	CB	CB	CB	CB	DC	DC	DC	DC	DC	DC	EB	EB	EB	EB	EB	EB
2.4	249	C,D		BB	BB	BB	BB	CB	CB	CB	CB	CB	CB	DC	DC	DC	DC	DC	DC	EB	EB	EB	EB	EB	EB
2.7	279	C,D K,M		BB	BB	BB	BB	CB	CB	CB	CB	CB	CB	DC	DC	DC	DC	DC	DC	EB	EB	EB	EB	EB	EB
3.0	309	C,D K,M		BB	BB	BB	BB	CB	CB	CB	CB	CB	CB	DC	DC	DC	DC	DC	DC	EB	EB	EB	EB	EB	EB
3.3	339	C,D K,M		BB	BB	BB	BB	CB	CB	CB	CB	CB	CB	DC	DC	DC	DC	DC	DC	EB	EB	EB	EB	EB	EB
3.9	399	C,D K,M		BB	BB	BB	BB	CB	CB	CB	CB	CB	CB	DC	DC	DC	DC	DC	DC	EB	EB	EB	EB	EB	EB
4.3	439	C,D K,M		BB	BB	BB	BB	CB	CB	CB	CB	CB	CB	DC	DC	DC	DC	DC	DC	EB	EB	EB	EB	EB	EB
4.7	479	C,D K,M		BB	BB	BB	BB	CB	CB	CB	CB	CB	CB	DC	DC	DC	DC	DC	DC	EB	EB	EB	EB	EB	EB
5.1	519	C,D K,M		BB	BB	BB	BB	CB	CB	CB	CB	CB	CB	DC	DC	DC	DC	DC	DC	EB	EB	EB	EB	EB	EB
5.6	569	C,D J,K,M		BB	BB	BB	BB	CB	CB	CB	CB	CB	CB	DC	DC	DC	DC	DC	DC	EB	EB	EB	EB	EB	EB
6.0	609	C,D J,K,M		BB	BB	BB	BB	CB	CB	CB	CB	CB	CB	DC	DC	DC	DC	DC	DC	EB	EB	EB	EB	EB	EB
6.2	629	C,D J,K,M		BB	BB	BB	BB	CB	CB	CB	CB	CB	CB	DC	DC	DC	DC	DC	DC	EB	EB	EB	EB	EB	EB
6.8	689	C,D J,K,M		BB	BB	BB	BB	CB	CB	CB	CB	CB	CB	DC	DC	DC	DC	DC	DC	EB	EB	EB	EB	EB	EB
7.0	709	C,D J,K,M		BB	BB	BB	BB	CB	CB	CB	CB	CB	CB	DC	DC	DC	DC	DC	DC	EB	EB	EB	EB	EB	EB
7.5	759	C,D J,K,M		BB	BB	BB	BB	CB	CB	CB	CB	CB	CB	DC	DC	DC	DC	DC	DC	EB	EB	EB	EB	EB	EB
8.2	829	C,D J,K,M		BB	BB	BB	BB	CB	CB	CB	CB	CB	CB	DC	DC	DC	DC	DC	DC	EB	EB	EB	EB	EB	EB
9.1	919	C,D J,K,M		BB	BB	BB	BB	CB	CB	CB	CB	CB	CB	DC	DC	DC	DC	DC	DC	EB	EB	EB	EB	EB	EB
10.0	100	C,D J,K,M	AA^	BB	BB	BB	BB	CB	CB	CB	CB	CB	CB	DC	DC	DC	DC	DC	DC	EB	EB	EB	EB	EB	EB
11.0	110	C,D J,K,M		BB	BB	BB	BB	CB	CB	CB	CB	CB	CB	DC	DC	DC	DC	DC	DC	EB	EB	EB	EB	EB	EB
12.0	120	C,D J,K,M	AA~	BB	BB	BB	BB	CB	CB	CB	CB	CB	CB	DC	DC	DC	DC	DC	DC	EB	EB	EB	EB	EB	EB
13.0	130	C,D J,K,M		BB	BB	BB	BB	CB	CB	CB	CB	CB	CB	DC	DC	DC	DC	DC	DC	EB	EB	EB	EB	EB	EB
15.0	150	C,D G,J,K,M	AA~	BB	BB	BB	BB	CB	CB	CB	CB	CB	CB	DC	DC	DC	DC	DC	DC	EB	EB	EB	EB	EB	EB
16.0	160	C,D G,J,K,M		BB	BB	BB	BB	CB	CB	CB	CB	CB	CB	DC	DC	DC	DC	DC	DC	EB	EB	EB	EB	EB	EB
18.0	180	C,D G,J,K,M	AA~	BB	BB	BB	BB	CB	CB	CB	CB	CB	CB	DC	DC	DC	DC	DC	DC	EB	EB	EB	EB	EB	EB
20.0	200	C,D G,J,K,M		BB	BB	BB	BB	CB	CB	CB	CB	CB	CB	DC	DC	DC	DC	DC	DC	EB	EB	EB	EB	EB	EB
22.0	220	C,D G,J,K,M	AA~	BB	BB	BB	BB	CB	CB	CB	CB	CB	CB	DC	DC	DC	DC	DC	DC	EB	EB	EB	EB	EB	EB
24.0	240	C,D G,J,K,M		BB	BB	BB	BB	CB	CB	CB	CB	CB	CB	DC	DC	DC	DC	DC	DC	EB	EB	EB	EB	EB	EB
27.0	270	D,F,G,J,K,M	AA~	BB	BB	BB	BB	CB	CB	CB	CB	CB	CB	DC	DC	DC	DC	DC	DC	EB	EB	EB	EB	EB	EB
30.0	300	D,F,G,J,K,M		BB	BB	BB	BB	CB	CB	CB	CB	CB	CB	DC	DC	DC	DC	DC	DC	EB	EB	EB	EB	EB	EB
33.0	330	D,F,G,J,K,M	AA~	BB	BB	BB	BB	CB	CB	CB	CB	CB	CB	DC	DC	DC	DC	DC	DC	EB	EB	EB	EB	EB	EB
36.0	360	D,F,G,J,K,M		BB	BB	BB	BB	CB	CB	CB	CB	CB	CB	DC	DC	DC	DC	DC	DC	EB	EB	EB	EB	EB	EB
39.0	390	D,F,G,J,K,M	AA~	BB	BB	BB	BB	CB	CB	CB	CB	CB	CB	DC	DC	DC	DC	DC	DC	EB	EB	EB	EB	EB	EB
43.0	430	D,F,G,J,K,M		BB	BB	BB	BB	CB	CB	CB	CB	CB	CB	DC	DC	DC	DC	DC	DC	EB	EB	EB	EB	EB	EB
47.0	470	D,F,G,J,K,M	AA~	BB	BB	BB	BB	CB	CB	CB	CB	CB	CB	DC	DC	DC	DC	DC	DC	EB	EB	EB	EB	EB	EB
51.0	510	D,F,G,J,K,M		BB	BB	BB	BB	CB	CB	CB	CB	CB	CB	DC	DC	DC	DC	DC	DC	EB	EB	EB	EB	EB	EB
56.0	560	F,G,J,K,M	AA~	BB	BB	BB	BB	CB	CB	CB	CB	CB	CB	DC	DC	DC	DC	DC	DC	EB	EB	EB	EB	EB	EB
62.0	620	F,G,J,K,M		BB	BB	BB	BB	CB	CB	CB	CB	CB	CB	DC	DC	DC	DC	DC	DC	EB	EB	EB	EB	EB	EB
68.0	680	F,G,J,K,M	AA~	BB	BB	BB	BB	CB	CB	CB	CB	CB	CB	DC	DC	DC	DC	DC	DC	EB	EB	EB	EB	EB	EB
75.0	750	F,G,J,K,M		BB	BB	BB	BB	CB	CB	CB	CB	CB	CB	DC	DC	DC	DC	DC	DC	EB	EB	EB	EB	EB	EB
82.0	820	F,G,J,K,M	AA~	BB	BB	BB	BB	CB	CB	CB	CB	CB	CB	DC	DC	DC	DC	DC	DC	EB	EB	EB	EB	EB	EB
91.0	910	F,G,J,K,M		BB	BB	BB	BB	CB	CB	CB	CB	CB		DC	DC	DC	DC	DC	DC	EB	EB	EB	EB	EB	EB
100.0	101	F,G,J,K,M	AA~	BB	BB	BB	BB	CB	CB	CB	CB	CB		DC	DC	DC	DC	DC	DC	EB	EB	EB	EB	EB	EB
110.0	111	F,G,J,K,M						CB	CB	CB	CB	CB		DC	DC	DC	DC	DC	DC	EB	EB	EB	EB	EB	EB
120.0	121	F,G,J,K,M					BB•	CB	CB	CB	CB	CB		DC	DC	DC	DC	DC	DC	EB	EB	EB	EB	EB	EB
130.0	131	F,G,J,K,M						CB	CB	CB	CB	CB		DC	DC	DC	DC	DC	DC	EB	EB	EB	EB	EB	EB
150.0	151	F,G,J,K,M					BB•	CB	CB	CB	CB	CB		DC	DC	DC	DC	DC	DC	EB	EB	EB	EB	EB	EB
160.0	161	F,G,J,K,M						CB	CB	CB	CB	CB		DC	DC	DC	DC	DC	DC	EB	EB	EB	EB	EB	EB
180.0	181	F,G,J,K,M					BB•	CB	CB	CB	CB	CB		DC	DC	DC	DC	DC	DC	EB	EB	EB	EB	EB	EB
200.0	201	F,G,J,K,M						CB	CB	CB	CB	CB		DC	DC	DC	DC	DC	DC	EB	EB	EB	EB	EB	EB
220.0	221	F,G,J,K,M					BB•	CB	CB	CB	CB	CB		DC	DC	DC	DC	DC	DC	EB	EB	EB	EB	EB	EB
240.0	241	F,G,J,K,M						CB	CB	CB	CB	CB		DC	DC	DC	DC	DC	DC	EB	EB	EB	EB	EB	EB
270.0	271	F,G,J,K,M					BB•	CB	CB	CB	CB	CB		DC	DC	DC	DC	DC	DC	EB	EB	EB	EB	EB	EB
300.0	301	F,G,J,K,M						CB	CB	CB	CB	CB		DC	DC	DC	DC	DC	DC	EB	EB	EB	EB	EB	EB
330.0	331	F,G,J,K,M					BB•	CB	CB	CB	CB	CB		DC	DC	DC	DC	DC	DC	EB	EB	EB	EB	EB	EB
360.0	361	F,G,J,K,M						CB	CB	CB	CB			DC	DC	DC	DC	DC	DC	EB	EB	EB	EB	EB	EB
390.0	391	F,G,J,K,M						CB	CB	CB	CB			DC	DC	DC	DC	DC	DC	EB	EB	EB	EB	EB	EB
430.0	431	F,G,J,K,M						CB	CB	CB	CB			DC	DC	DC	DC	DC	DC	EB	EB	EB	EB	EB	EB
470.0	471	F,G,J,K,M						CB	CB	CB	CB			DC	DC	DC	DC	DC	DD	EB	EB	EB	EB	EB	EB
510.0	511	F,G,J,K,M						CB	CB	CB	CB			DC	DC	DC	DC	DC		EB	EB	EB	EB	EB	EB
560.0	561	F,G,J,K,M						CB	CB	CB	CC			DC	DC	DC	DC	DC		EB	EB	EB	EB	EB	EB
620.0	621	F,G,J,K,M						CB	CB	CB	CC			DC	DC	DC	DC	DC		EB	EB	EB	EB	EB	EC
680.0	681	F,G,J,K,M						CB	CB	CB	CC			DC	DC	DC	DC	DC		EB	EB	EB	EB	EB	EC
750.0	751	F,G,J,K,M						CB	CB	CB	CC			DC	DC	DC	DC	DC		EB	EB	EB	EB	EB	EC
820.0	821	F,G,J,K,M						CB	CB	CB	CC			DC	DC	DC	DC	DC		EB	EB	EB	EB	EB	EC
910.0	911	F,G,J,K,M						CB	CB	CB	CC			DC	DC	DC	DC	DD		EB	EB	EB	EB	EB	ED
1000.0	102	F,G,J,K,M						CB	CB	CB	CC			DC	DC	DC	DC	DD		EB	EB	EB	EB	EB	EE
1100.0	112	F,G,J,K,M												DC	DC	DC	DC			EB	EB	EB	EB	EB	EB
1200.0	122	F,G,J,K,M												DC	DC	DC	DC			EB	EB	EB	EB	EB	EB
1300.0	132	F,G,J,K,M												DD	DD	DD	DD			EB	EB	EB	EB	EC	EC
1500.0	152	F,G,J,K,M												DD	DD	DD	DD			EB	EB	EB	EB	ED	EC
1600.0	162	F,G,J,K,M												DD	DD	DD	DD			EB	EB	EB	EB	ED	ED
1800.0	182	F,G,J,K,M												DD	DD	DD	DD			EB	EB	EB	EB	ED	ED
2000.0	202	F,G,J,K,M												DC	DC	DC				EB	EB	EB	EB	ED	
2200.0	222	F,G,J,K,M												DC	DC	DC				EB	EB	EB	EB	EE	
2400.0	242	F,G,J,K,M												DC	DC	DC				EB	EB	EB	EB	EC	
2700.0	272	F,G,J,K,M												DC	DC	DC				EB	EB	EB	EB	EC	
3000.0	302	F,G,J,K,M												DD	DD	DD				EC	EC	EC	EC	EC	
3300.0	332	F,G,J,K,M												DD	DD	DD				EC	EC	EC	EC	EE	
3600.0	362	F,G,J,K,M												DD	DD	DD				EC	EC	EC	EC	EE	
3900.0	392	F,G,J,K,M												DE	DE	DE				EC	EC	EC	EC	EF	
4300.0	432	F,G,J,K,M																		EC	EC	EC	EC		
4700.0	472	F,G,J,K,M																		EC	EC	EC	EC		
5100.0	512	F,G,J,K,M																		ED	ED	ED	ED		
5600.0	562	F,G,J,K,M																		ED	ED	ED	ED		
6200.0	622	F,G,J,K,M																		EB	EB	EB			
6800.0	682	F,G,J,K,M																		EB	EB	EB			
7500.0	752	F,G,J,K,M																		EB	EB	EB			
8200.0	822	F,G,J,K,M																		EC	EC	EC			
9100.0	912	F,G,J,K,M																		EC	EC	EC			
10,000.0	103	F,G,J,K,M																		ED	ED	ED			

*** Indicates EIA preferred chip sizes.**
NOTE: For non-standard capacitance values or voltages, contact your local KEMET sales representative.
50 Volt Ceramic Chips can be used in 63 volt applications.

Improved product with higher ratings and tighter capacitance tolerance product may be substituted within the same size (length, width, and thickness) at KEMET's option.
Reels with such substitutions will be marked with the improved KEMET part numbers.

- **Greater or equal to J (5%) tolerance available.** • **J Tolerance Only; ^ = D Tolerance Only ~ = J,K,M Tolerance Only**

See page 77 for Thickness Code Reference Chart.

Downloaded from Elcodis.com electronic components distributor

KEMET

C0G CAPACITANCE RANGE – 1210, 1812, 1825, 2220, 2225

Cap pF	Cap Code	Cap Tol.	C1210*			C1812*			C1825*			C2220			C2225		
			50V	100V	200V	50V	100V	200V	50V	100V	200V	50V	100V	200V	50V	100V	200V
10.0	100	D J,K,M	FB	FB	FB												
12.0	120	D J,K,M	FB	FB	FB												
15.0	150	D G,J,K,M	FB	FB	FB												
18.0	180	D G,J,K,M	FB	FB	FB												
22.0	220	D G,J,K,M	FB	FB	FB												
27.0	270	D,F,G,J,K,M	FB	FB	FB												
33.0	330	D,F,G,J,K,M	FB	FB	FB												
39.0	390	D,F,G,J,K,M	FB	FB	FB												
47.0	470	D,F,G,J,K,M	FB	FB	FB												
56.0	560	F,G,J,K,M	FB	FB	FB												
68.0	680	F,G,J,K,M	FB	FB	FB												
82.0	820	F,G,J,K,M	FB	FB	FB												
100.0	101	F,G,J,K,M	FB	FB	FB												
120.0	121	F,G,J,K,M	FB	FB	FB												
150.0	151	F,G,J,K,M	FB	FB	FB												
180.0	181	F,G,J,K,M	FB	FB	FB												
220.0	221	F,G,J,K,M	FB	FB	FB												
270.0	271	F,G,J,K,M	FB	FB	FB												
330.0	331	F,G,J,K,M	FB	FB	FB												
390.0	391	F,G,J,K,M	FB	FB	FB												
470.0	471	F,G,J,K,M	FB	FB	FB	GB	GB	GB									
560.0	561	F,G,J,K,M	FB	FB	FB	GB	GB	GB									
680.0	681	F,G,J,K,M	FB	FB	FB	GB	GB	GB									
820.0	821	F,G,J,K,M	FB	FB	FB	GB	GB	GB									
1,000.0	102	F,G,J,K,M	FB	FB	FB	GB	GB	GB									
1,200.0	122	F,G,J,K,M	FB	FB	FB	GB	GB	GB									
1,500.0	152	F,G,J,K,M	FB	FB	FE	GB	GB	GB									
1,800.0	182	F,G,J,K,M	FB	FB	FE	GB	GB	GB									
2,200.0	222	F,G,J,K,M	FB	FC	FG	GB	GB	GB									
2,700.0	272	F,G,J,K,M	FB	FC	FC	GB	GB	GB									
3,300.0	332	F,G,J,K,M	FB	FF	FF	GB	GB	GB									
3,900.0	392	F,G,J,K,M	FB	FF		GB	GB	GB	HB	HB	HB						
4,700.0	472	F,G,J,K,M	FF	FG		GB	GB	GD	HB	HB	HB				KB	KB	KB
5,600.0	562	F,G,J,K,M	FB	FG		GB	GB	GH	HB	HB	HB				KB	KB	KB
6,800.0	682	F,G,J,K,M	FB	FG		GB	GB	GJ	HB	HB	HB	JB	JB		KB	KB	KB
8,200.0	822	F,G,J,K,M	FC			GB	GB		HB	HB	HB	JB	JB		KB	KB	KB
10,000.0	103	F,G,J,K,M	FF			GB	GH		HB	HB	HE	JB	JB		KB	KB	KB
12,000.0	123	F,G,J,K,M	FG			GB	GG		HB	HB	HE	JB	JB		KB	KB	KB
15,000.0	153	F,G,J,K,M							HB	HB		JB	JB		KB	KB	KE
18,000.0	183	F,G,J,K,M							HB	HB		JB	JB		KB	KB	
22,000.0	223	F,G,J,K,M							HB	HE		JB			KB	KB	
27,000.0	273	F,G,J,K,M							HB	HE		JB			KB	KB	
33,000.0	333	F,G,J,K,M													KB		

X7R CAPACITANCE RANGE – 0402, 0603, 0805, 1206

Cap pF	Cap Code	Cap Tol.	C0402					C0603							C0805							C1206						
			6.3V	10V	16V	25V	50V	6.3V	10V	16V	25V	50V	100V	200V	6.3V	10V	16V	25V	50V	100V	200V	6.3V	10V	16V	25V	50V	100V	200V
150	151	K,M,J	BB	BB	BB	BB	BB																					
180	181	K,M,J	BB	BB	BB	BB	BB	CB	CB	CB	CB	CB	CB	CB														
220	221	K,M,J	BB	BB	BB	BB	BB	CB	CB	CB	CB	CB	CB	CB	DC	DC	DC	DC	DC	DC	DC							
270	271	K,M,J	BB	BB	BB	BB	BB	CB	CB	CB	CB	CB	CB	CB	DC	DC	DC	DC	DC	DC	DC							
330	331	K,M,J	BB	BB	BB	BB	BB	CB	CB	CB	CB	CB	CB	CB	DC	DC	DC	DC	DC	DC	DC							
390	391	K,M,J	BB	BB	BB	BB	BB	CB	CB	CB	CB	CB	CB	CB	DC	DC	DC	DC	DC	DC	DC							
470	471	K,M,J	BB	BB	BB	BB	BB	CB	CB	CB	CB	CB	CB	CB	DC	DC	DC	DC	DC	DC	DC							
560	561	K,M,J	BB	BB	BB	BB	BB	CB	CB	CB	CB	CB	CB	CB	DC	DC	DC	DC	DC	DC	DC							
680	681	K,M,J	BB	BB	BB	BB	BB	CB	CB	CB	CB	CB	CB	CB	DC	DC	DC	DC	DC	DC	DC							
820	821	K,M,J	BB	BB	BB	BB	BB	CB	CB	CB	CB	CB	CB	CB	DC	DC	DC	DC	DC	DC	DC							
1,000	102	K,M,J	BB	BB	BB	BB	BB	CB	CB	CB	CB	CB	CB	CB	DC	DC	DC	DC	DC	DC	DC	EB	EB	EB	EB	EB	EB	EB
1,200	122	K,M,J	BB	BB	BB	BB	BB	CB	CB	CB	CB	CB	CB	CC	DC	DC	DC	DC	DC	DC	DC	EB	EB	EB	EB	EB	EB	EB
1,500	152	K,M,J	BB	BB	BB	BB	BB	CB	CB	CB	CB	CB	CB	CC	DC	DC	DC	DC	DC	DC	DC	EB	EB	EB	EB	EB	EB	EB
1,800	182	K,M,J	BB	BB	BB	BB	BB#	CB	CB	CB	CB	CB	CB	CC	DC	DC	DC	DC	DC	DC	DC	EB	EB	EB	EB	EB	EB	EB
2,200	222	K,M,J	BB	BB	BB	BB	BB#	CB	CB	CB	CB	CB	CB	CC	DC	DC	DC	DC	DC	DC	DC	EB	EB	EB	EB	EB	EB	EB
2,700	272	K,M,J	BB	BB	BB	BB	BB#	CB	CB	CB	CB	CB	CB	CC	DC	DC	DC	DC	DC	DC	DC	EB	EB	EB	EB	EB	EB	EB
3,300	332	K,M,J	BB	BB	BB	BB	BB#	CB	CB	CB	CB	CB	CB	CC	DC	DC	DC	DC	DC	DC	DC	EB	EB	EB	EB	EB	EB	EB
3,900	392	K,M,J	BB	BB	BB	BB	BB#	CB	CB	CB	CB	CB	CB	CC	DC	DC	DC	DC	DC	DC	DC	EB	EB	EB	EB	EB	EB	EB
4,700	472	K,M,J	BB	BB	BB	BB	BB#	CB	CB	CB	CB	CB	CB	CC	DC	DC	DC	DC	DC	DC	DC	EB	EB	EB	EB	EB	EB	EB
5,600	562	K,M,J	BB	BB	BB	BB	BB#	CB	CB	CB	CB	CB	CB	CC	DC	DC	DC	DC	DC	DC	DC	EB	EB	EB	EB	EB	EB	EB
6,800	682	K,M,J	BB	BB	BB	BB	BB#	CB	CB	CB	CB	CB	CB	CC	DC	DC	DC	DC	DC	DC	DC	EB	EB	EB	EB	EB	EB	EB
8,200	822	K,M,J	BB	BB	BB	BB	BB#	CB	CB	CB	CB	CB	CB	CC	DC	DC	DC	DC	DC	DC	DC	EB	EB	EB	EB	EB	EB	EB
10,000	103	K,M,J	BB	BB	BB	BB	BB#	CB	CB	CB	CB	CB	CB	CC	DC	DC	DC	DC	DC	DC	DC	EB	EB	EB	EB	EB	EB	EB
12,000	123	K,M,J**	BB	BB	BB			CB	CB	CB	CB	CB	CC		DC	DC	DC	DC	DC	DC	DC	EB	EB	EB	EB	EB	EB	EB
15,000	153	K,M,J**	BB	BB	BB			CB	CB	CB	CB	CB	CC		DC	DC	DC	DC	DC	DD	DC	EB	EB	EB	EB	EB	EB	EB
18,000	183	K,M,J**	BB	BB	BB			CB	CB	CB	CB	CB	CC		DC	DC	DC	DC	DC	DD	DC	EB	EB	EB	EB	EB	EB	EB
22,000	223	K,M,J**	BB	BB	BB	BB*	BB*	CB	CB	CB	CB	CB	CC		DC	DC	DC	DC	DC	DD	DC	EB	EB	EB	EB	EB	EB	EB
27,000	273	K,M,J**	BB	BB	BB			CB	CB	CB	CB	CB	CC		DC	DC	DC	DC	DC	DD	DE	EB	EB	EB	EB	EB	EB	EB
33,000	333	K,M,J**	BB	BB	BB			CB	CB	CB	CB	CB	CC		DC	DC	DC	DC	DC	DD	DE	EB	EB	EB	EB	EB	EB	EB
39,000	393	K,M,J**	BB	BB	BB			CB	CB	CB	CB	CB	CC		DC	DC	DC	DC	DC	DD	DE	EB	EB	EB	EB	EB	EC	EB
47,000	473	K,M,J**	BB	BB	BB	BB*		CB	CB	CB	CB	CB			DC	DC	DC	DC	DC	DE	DG	EB	EB	EB	EB	EB	EC	ED
56,000	563	K,M,J**	BB	BB	BB			CB	CB	CB	CB	CC			DD	DD	DD	DD	DD#	DE	DG	EB	EB	EB	EB	EB	EB	ED
68,000	683	K,M,J**	BB	BB	BB			CB	CB	CB	CB	CC			DD	DD	DD	DD	DD#	DE		EB	EB	EB	EB	EB	EB	ED
82,000	823	K,M,J**	BB	BB	BB			CB	CB	CB	CB	CC			DD	DD	DD	DD	DD#	DE		EB	EB	EB	EB	EB	EB	ED
100,000	104	K,M,J**	BB	BB	BB			CB#	CB#	CB#	CB#	CC#			DD	DD	DD	DD	DD#	DE		EB	EB	EB	EB	EB	EB	EM
120,000	124	K,M,J**						CB#	CB#	CB#					DC	DC	DC	DC	DD#	DG		EC	EC	EC	EC	EC	EC	EM
150,000	154	K,M,J**						CB#	CB#	CB#		CD*			DC	DC	DC	DC	DD#			EC	EC	EC	EC	EC	EC	EG
180,000	184	K,M,J**						CB#	CB#	CB#					DC	DC	DC	DC	DD#			EC	EC	EC	EC	EC#	EC#	
220,000	224	K,M,J**						CB#	CB#	CB#	CD*				DC	DC	DC	DC	DD#			EC	EC	EC	EC	EC#	EC#	
270,000	274	K,M,J**						CB	CB	CB					DD	DD	DD	DD				EB	EB	EB	EB	EC#	EM	
330,000	334	K,M,J**						CB	CB	CB					DE	DE	DE	DE				EB	EB	EB	EB	EC#	EG	
390,000	394	K,M,J**						CB	CB	CB					DG	DG	DG	DG				EB	EB	EB	EB	EG#	EG	
470,000	474	K,M,J**						CB	CB	CB					DG	DG	DG	DG	DE*			EC	EC	EC	EC	EC#		
560,000	564	K,M,J**													DG	DG	DG	DG				ED	ED	ED	ED	EC#		
680,000	684	K,M,J**													DG	DG	DG		DJ*			EE	EE	EE	EE	ED#		
820,000	824	K,M,J*													DG	DG	DG					EF	EF	EF	EF			
1,000,000	105	K,M,J**								CD*					DG	DG	DG	DJ*				EE	EE	EF	EG	ED*		
1,200,000	125	K,M,J**													DE	DE	DE					ED	ED	ED	EG			
1,500,000	155	K,M,J**													DG	DG	DG					EF	EF	EF	EG			
1,800,000	185	K,M,J**													DG	DG	DG					EF	EF	EF				
2,200,000	225	K,M,J**													DG	DG	DG					EG	EG	EG	EF*	EH*+		
2,700,000	275	K,M,J**																				EN	EN	EK				
3,300,000	335	K,M,J**																				ED	ED	ED				
3,900,000	395	K,M,J**																				EL	EL	EL				
4,700,000	475	K,M,J**																				EM*+	EM*+	EM*+	EH*+			
5,600,000	565	K,M,J**																				EH*+	EH*+	EH*+				
6,800,000	685	K,M,J**																				EH*+	EH*+	EH*+				
8,200,000	825	K,M,J**																				EH*+	EH*+	EH*+				
10,000,000	106	K,M,J**																				EH*+	EH*+	EH*+				

* Capacitance K or M. ontact KEMET Sales Rep for J tolerance availability. + Reflow Only.
NOTE: For non-standard capacitance values or voltages, contact your local KEMET sales representative.
X7R dielectric - Extended Range Values - Cap and DF measured @ 0.5 Vrms.

Improved product with higher ratings and tighter capacitance tolerance product may be substituted within the same size (length, width, and thickness) at KEMET's option.
Reels with such substitutions will be marked with the improved KEMET part numbers.

See page 77 for Thickness Code Reference Chart.

Downloaded from Elcodis.com electronic components distributor

Thickness Code Reference Chart
Packaging Quantity Based on Finished Chip Thickness Specifications

Thickness Code	Chip Size	Chip Thickness Range (mm)	Qty per Reel 7" Plastic	Qty per Reel 13" Plastic	Qty per Reel 7" Paper	Qty per Reel 13" Paper	Qty per Bulk Cassette
AA	0201	.30 ± .03	N/A	N/A	15,000	N/A	N/A
BB	0402	.50 ± .05	N/A	N/A	10,000	50,000	50,000
CB	0603	.80 ± .07	N/A	N/A	4,000	10,000	15,000
CC	0603	.80 ± .10	N/A	N/A	4,000	10,000	N/A
CD	0603	.80 ± .15	N/A	N/A	4,000	10,000	N/A
DB	0805	.60 ± .10	N/A	N/A	N/A	N/A	10,000
DC	0805	.78 ± .10	4,000	10,000	4,000	10,000	N/A
DD	0805	.90 ± .10	4,000	10,000	N/A	N/A	N/A
DE	0805	1.00 ± .10	2,500	10,000	N/A	N/A	N/A
DF	0805	1.10 ± .10	2,500	10,000	N/A	N/A	N/A
DG	0805	1.25 ± .15	2,500	10,000	N/A	N/A	N/A
DH	0805	1.25 ± .20	2,500	10,000	N/A	N/A	N/A
DJ	0805	1.25 ± .20	3,000	10,000	N/A	N/A	N/A
DK	0805	1.25 ± .15	3,000	10,000	N/A	N/A	N/A
EB	1206	.78 ± .10	4,000	10,000	4,000	10,000	N/A
EC	1206	.90 ± .10	4,000	10,000	N/A	N/A	N/A
ED	1206	1.00 ± .10	2,500	10,000	N/A	N/A	N/A
EE	1206	1.10 ± .10	2,500	10,000	N/A	N/A	N/A
EF	1206	1.20 ± .15	2,500	10,000	N/A	N/A	N/A
EG	1206	1.60 ± .15	2,000	8,000	N/A	N/A	N/A
EH	1206	1.60 ± .20	2,000	8,000	N/A	N/A	N/A
EJ	1206	1.70 ± .20	2,000	8,000	N/A	N/A	N/A
EK	1206	.80 ± .10	2,000	8,000	N/A	N/A	N/A
EL	1206	1.15 ± .15	2,000	8,000	N/A	N/A	N/A
EM	1206	1.25 ± .15	2,500	10,000	N/A	N/A	N/A
EN	1206	0.95 ± .10	4,000	10,000	N/A	N/A	N/A
FB	1210	.78 ± .10	4,000	10,000	N/A	N/A	N/A
FC	1210	.90 ± .10	4,000	10,000	N/A	N/A	N/A
FD	1210	.95 ± .10	4,000	10,000	N/A	N/A	N/A
FE	1210	1.00 ± .10	2,500	10,000	N/A	N/A	N/A
FF	1210	1.10 ± .10	2,500	10,000	N/A	N/A	N/A
FG	1210	1.25 ± .15	2,500	10,000	N/A	N/A	N/A
FH	1210	1.55 ± .15	2,000	8,000	N/A	N/A	N/A
FJ	1210	1.85 ± .20	2,000	8,000	N/A	N/A	N/A
FK	1210	2.10 ± .20	2,000	8,000	N/A	N/A	N/A
FL	1210	1.40 ± .15	2,000	8,000	N/A	N/A	N/A
FM	1210	1.70 ± .20	2,000	8,000	N/A	N/A	N/A
FN	1210	1.85 ± .20	2,000	8,000	N/A	N/A	N/A
FO	1210	1.50 ± .20	2,000	8,000	N/A	N/A	N/A
FP	1210	1.60 ± .20	2,000	8,000	N/A	N/A	N/A
FQ	1210	2.5 ± .20	1,500	8,000	N/A	N/A	N/A
FR	1210	2.25 ± .20	2,000	8,000	N/A	N/A	N/A
FS	1210	2.50 ± .20	1,000	4,000	N/A	N/A	N/A
GB	1812	1.00 ± .10	1,000	4,000	N/A	N/A	N/A
GC	1812	1.10 ± .10	1,000	4,000	N/A	N/A	N/A
GD	1812	1.25 ± .15	1,000	4,000	N/A	N/A	N/A
GE	1812	1.30 ± .10	1,000	4,000	N/A	N/A	N/A
GF	1812	1.50 ± .10	1,000	4,000	N/A	N/A	N/A
GG	1812	1.55 ± .10	1,000	4,000	N/A	N/A	N/A
GH	1812	1.40 ± .15	1,000	4,000	N/A	N/A	N/A
GJ	1812	1.70 ± .15	1,000	4,000	N/A	N/A	N/A
GK	1812	1.60 ± .20	1,000	4,000	N/A	N/A	N/A
GL	1812	1.90 ± .20	1,000	4,000	N/A	N/A	N/A
GM	1812	2.00 ± .20	1,000	4,000	N/A	N/A	N/A
GN	1812	1.70 ± .20	1,000	4,000	N/A	N/A	N/A
HB	1825	1.10 ± .15	1,000	4,000	N/A	N/A	N/A
HC	1825	1.15 ± .15	1,000	4,000	N/A	N/A	N/A
HD	1825	1.30 ± .15	1,000	4,000	N/A	N/A	N/A
HE	1825	1.40 ± .15	1,000	4,000	N/A	N/A	N/A
HF	1825	1.50 ± .15	1,000	4,000	N/A	N/A	N/A
JB	2220	1.00 ± .15	1,000	4,000	N/A	N/A	N/A
JC	2220	1.10 ± .15	1,000	4,000	N/A	N/A	N/A
JD	2220	1.30 ± .15	1,000	4,000	N/A	N/A	N/A
JE	2220	1.40 ± .15	1,000	4,000	N/A	N/A	N/A
JF	2220	1.50 ± .15	1,000	4,000	N/A	N/A	N/A
KB	2225	1.00 ± .15	1,000	4,000	N/A	N/A	N/A
KC	2225	1.10 ± .15	1,000	4,000	N/A	N/A	N/A
KD	2225	1.30 ± .15	1,000	4,000	N/A	N/A	N/A
KE	2225	1.40 ± .15	1,000	4,000	N/A	N/A	N/A

This chart refers to ceramic chip thickness codes on pages 72-75.

Downloaded from Elcodis.com electronic components distributor

Tape & Reel Packaging

KEMET offers Multilayer Ceramic Chip Capacitors packaged in 8mm and 12mm plastic tape on 7" and 13" reels in accordance with EIA standard 481-1: Taping of surface mount components for automatic handling. This packaging system is compatible with all tape fed automatic pick and place systems. See page 77 for details on reeling quantities for commercial chips and page 90 for MIL-PRF-55681 chips.

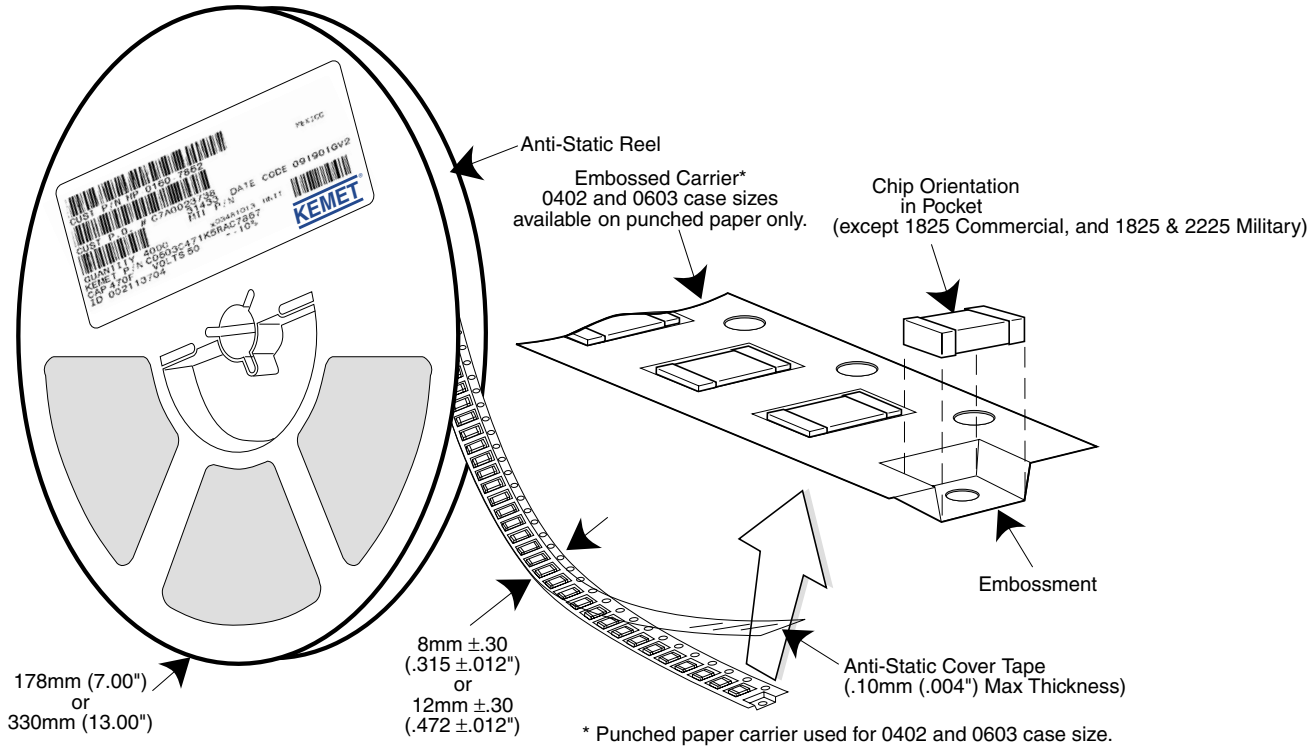

SURFACE MOUNT LAND DIMENSIONS - CERAMIC CHIP CAPACITORS - MM

Grid Placement Courtyard

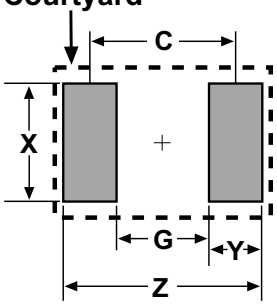

	Reflow Solder					Wave Solder				
Dimension	**Z**	**G**	**X**	**Y(ref)**	**C(ref)**	**Z**	**G**	**X**	**Y(ref)**	**Smin**
0402	2.14	0.28	0.74	0.93	1.21	Not Recommended				
0603	2.78	0.68	1.08	1.05	1.73	3.18	0.68	0.80	1.25	1.93
0805	3.30	0.70	1.60	1.30	2.00	3.70	0.70	1.10	1.50	2.20
1206	4.50	1.50	2.00	1.50	3.00	4.90	1.50	1.40	1.70	3.20
1210	4.50	1.50	2.90	1.50	3.00	4.90	1.50	2.00	1.70	3.20
1812	5.90	2.30	3.70	1.80	4.10	Not Recommended				
1825	5.90	2.30	6.90	1.80	4.10					
2220	7.00	3.30	5.50	1.85	5.15					
2225	7.00	3.30	6.80	1.85	5.15					

Calculation Formula
Z = Lmin + 2Jt + Tt
G = Smax - 2Jh -Th
X = Wmin + 2Js + Ts
Tt, Th, Ts = Combined tolerances

©KEMET Electronics Corporation, P.O. Box 5928, Greenville, S.C. 29606, (864) 963-6300
Downloaded from Elcodis.com electronic components distributor

Performance Notes

1. **Cover Tape Break Force:** 1.0 Kg Minimum.
2. **Cover Tape Peel Strength:** The total peel strength of the cover tape from the carrier tape shall be:

Tape Width	Peel Strength
8 mm	0.1 Newton to 1.0 Newton (10g to 100g)
12 mm	0.1 Newton to 1.3 Newton (10g to 130g)

The direction of the pull shall be opposite the direction of the carrier tape travel. The pull angle of the carrier tape shall be 165° to 180° from the plane of the carrier tape. During peeling, the carrier and/or cover tape shall be pulled at a velocity of 300 ±10 mm/minute.

3. **Reel Sizes:** Molded tantalum capacitors are available on either 180 mm (7") reels (standard) or 330 mm (13") reels (with C-7280). Note that 13" reels are preferred.
4. **Labeling:** Bar code labeling (standard or custom) shall be on the side of the reel opposite the sprocket holes. Refer to EIA-556.

Embossed Carrier Tape Configuration: Figure 1

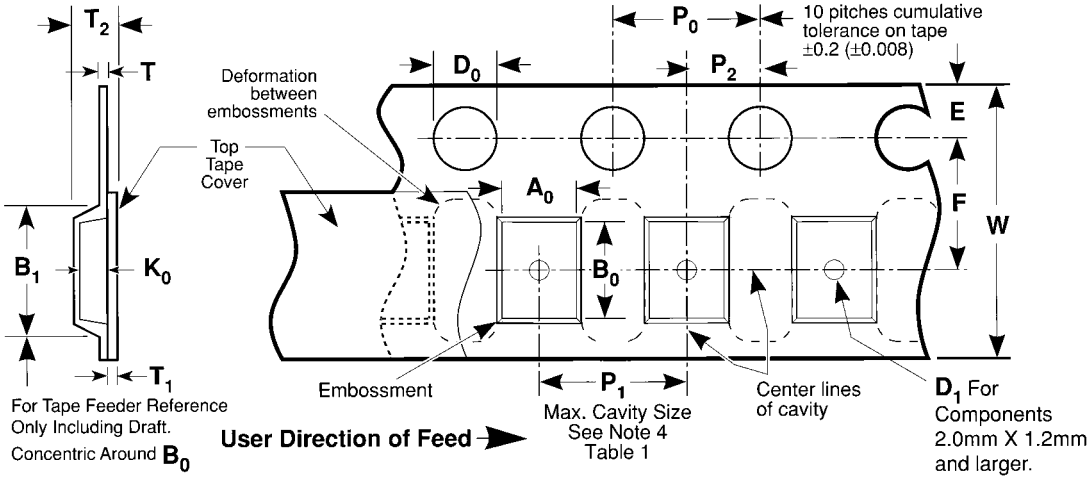

Table 1 — EMBOSSED TAPE DIMENSIONS (Metric will govern)

Constant Dimensions — Millimeters (Inches)							
Tape Size	**D_0**	**E**	**P_0**	**P_2**	**T Max**	**T_1 Max**	
8 mm and 12 mm	1.5 +0.10 -0.0 (0.059 +0.004, -0.0)	1.75 ±0.10 (0.069 ±0.004)	4.0 ±0.10 (0.157 ±0.004)	2.0 ±0.05 (0.079 ±0.002)	0.600 (0.024)	0.100 (0.004)	

Variable Dimensions — Millimeters (Inches)									
Tape Size	**Pitch**	**B_1 Max. Note 1**	**D_1 Min. Note 2**	**F**	**P_1**	**R Min. Note 3**	**T_2 Max**	**W**	**$A_0B_0K_0$ Note 4**
8 mm	Single (4 mm)	4.4 (0.173)	1.0 (0.039)	3.5 ±0.05 (0.138 ±0.002)	4.0 ±0.10 (0.157 ±0.004)	25.0 (0.984)	2.5 (0.098)	8.0 ±0.30 (.315 ±0.012)	
12 mm	Double (8 mm)	8.2 (0.323)	1.5 (0.059)	5.5 ±0.05 (0.217 ±0.002)	8.0 ±0.10 (0.315 ±0.004)	30.0 (1.181)	4.6 (0.181)	12.0 ±0.30 (0.472 ±0.012)	

NOTES

1. B1 dimension is a reference dimension for tape feeder clearance only.
2. The embossment hole location shall be measured from the sprocket hole controlling the location of the embossment. Dimensions of embossment location and hole location shall be applied independent of each other.
3. Tape with components shall pass around radius "R" without damage (see sketch A). The minimum trailer length (Fig. 2) may require additional length to provide R min. for 12 mm embossed tape for reels with hub diameters approaching N min. (Table 2)
4. The cavity defined by A_0, B_0, and K_0 shall be configured to surround the part with sufficient clearance such that the chip does not protrude beyond the sealing plane of the cover tape, the chip can be removed from the cavity in a vertical direction without mechanical restriction, rotation of the chip is limited to 20 degrees maximum in all 3 planes, and lateral movement of the chip is restricted to 0.5 mm maximum in the pocket (not applicable to vertical clearance.)

Downloaded from Elcodis.com electronic components distributor

Embossed Carrier Tape Configuration (cont.)

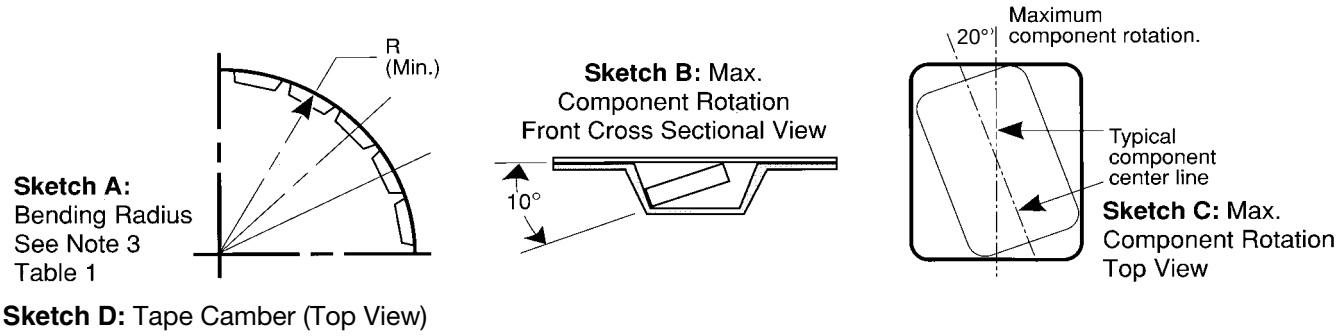

Sketch D: Tape Camber (Top View)

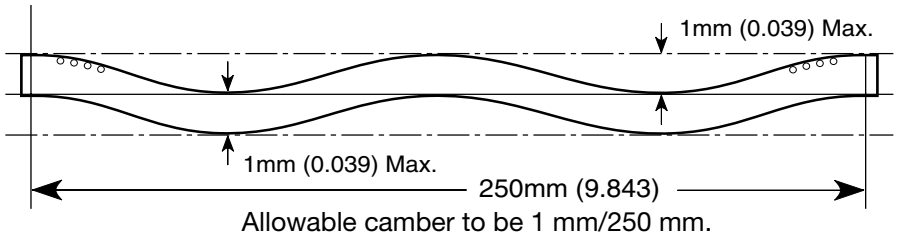

Allowable camber to be 1 mm/250 mm.

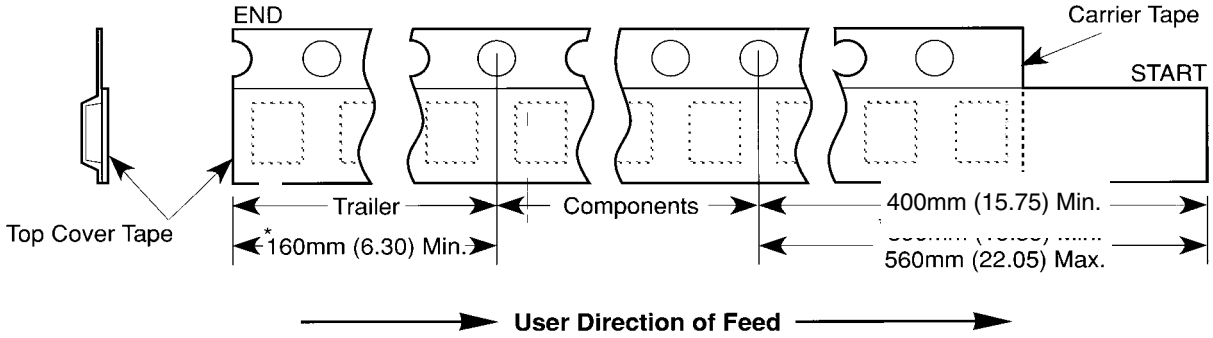

Figure 2: Tape Leader & Trailer Dimensions (Metric Dimensions Will Govern)

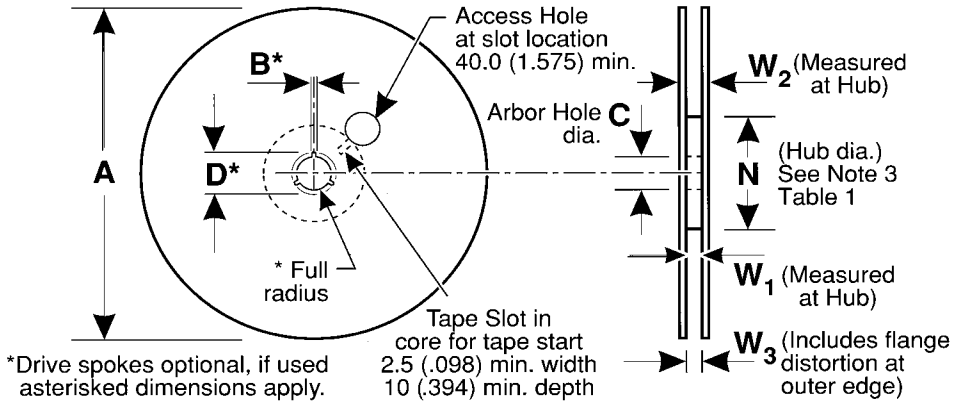

Figure 3: Reel Dimensions (Metric Dimensions will govern)

Table 2 – REEL DIMENSIONS (Metric will govern)

Tape Size	A Max	B* Min	C	D* Min	N Min	W_1	W_2 Max	W_3
8 mm	330.0 (12.992)	1.5 (0.059)	13.0 ± 0.20 (0.512 ± 0.008)	20.2 (0.795)	50.0 (1.969) See Note 3 Table 1	8.4 +1.5, -0.0 (0.331 +0.059, -0.0)	14.4 (0.567)	7.9 Min (0.311) 10.9 Max (0.429)
12 mm	330.0 (12.992)	1.5 (0.059)	13.0 ± 0.20 (0.512 ± 0.008)	20.2 (0.795)		12.4 +2.0, -0.0 (0.488 +0.078, -0.0)	18.4 (0.724)	11.9 Min (0.469) 15.4 Max (0.606)

©KEMET Electronics Corporation, P.O. Box 5928, Greenville, S.C. 29606, (864) 963-6300
Downloaded from Elcodis.com electronic components distributor

Punched Carrier (Paper Tape) Configuration (Ceramic Chips Only):

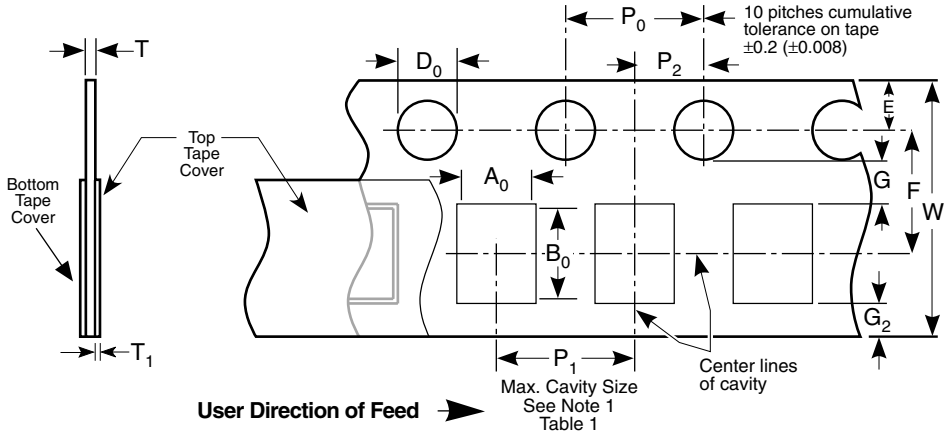

Table 1: 8 & 12mm Punched Tape
(Metric Dimensions Will Govern)

Constant Dimensions - Millimeters (Inches)

Tape Size	D_0	E	P_0	P_2	T_1	G_1	G_2	R Min.
8mm and 12mm	1.5 +0.10, -0.0 (.059 +0.004, -0.0)	1.75 ±0.10 (.069 ±0.004)	4.0 ± 0.10 (.157 ± 0.004)	2.0 ± 0.05 (.079 ± 0.002)	0.10 (.004) Max.	0.75 (.030) Min.	0.75 (.030) Min.	25 (.984) See Note 2 Table 1

Table 1: 8 & 12mm Punched Tape
(Metric Dimensions Will Govern)

Variable Dimensions - Millimeters (Inches)

Tape Size	P_1	F	W	A_0B_0	T
8mm 1/2 Pitch	2.0 ± 0.10 (.079 ±.004) See Requirements Section 3.3 (d)	3.5 ± 0.05 (.138 ± .002)	8.0 ± 0.3 (.315 ± 0.012)	See Note 1 Table 1	1.1mm (.043) Max. for Paper Base Tape and 1.6mm (.063) Max. for Non-Paper Base Compositions. See Note 3.
8mm	4.0 ± 0.10 (0.157 ± .004)				
12mm	4.0 ± 0.10 (0.157 ± .004)	5.5 ± 0.05 (.217 ± .002)	12.0 ± 0.3 (.472 ± .012)		
12mm Double Pitch	8.0 ± 0.10 (0.315 ± .004)				

Note:
1. A_0, B_0 and T determined by the maximum dimensions to the ends of the terminals extending from the body and/or the body dimensions of the component. The clearance between the ends of the terminals or body of the component to the sides and depth of the cavity (A_0, B_0 and T) must be within 0.05mm (.002) minimum and 0.50mm (.020) maximum. The clearance allowed must also prevent rotation of the component within the cavity of not more than 20 degrees (see sketches A and B).
2. Tape with components shall pass around radius "R" without damage.
3. KEMET nominal thicknesses are: 0402 = 0.6mm and all others 0.95mm minimum.

Sketch A:
Bending Radius
See Note 2
Table 1

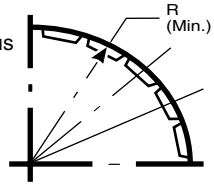

Sketch B:
Max. Component Rotation - Front Cross Sectional View

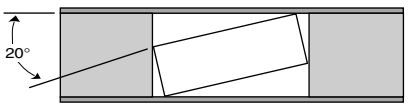

Sketch C:
Component Rotation - Top View

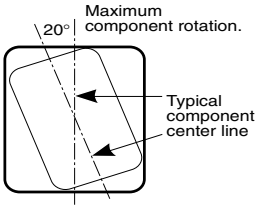

Downloaded from Elcodis.com electronic components distributor

Bulk Cassette Packaging (Ceramic Chips only)
(Meets Dimensional Requirements IEC-286-6 and EIAJ 7201)

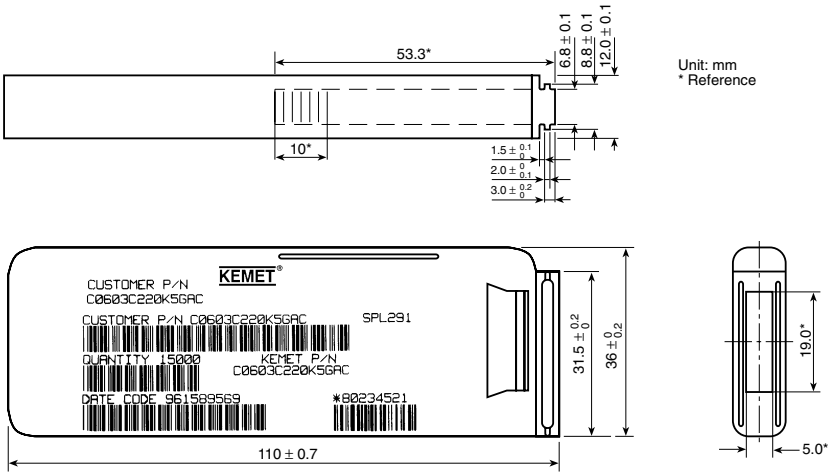

Table 2 – Capacitance Values Available In Bulk Cassette Packaging

Case Size	Dielectric	Voltage	Min. Cap Value	Max. Cap Value
0402	All	All	All	All
0603	All	All	All	All
0805	C0G	200	109	181
		100	109	331
		50	109	102
	X7R	200	221	392
		100	221	103
		50	221	273
		25	221	104
		16	221	104
	Y5V	25	104	224
		16	104	224

Table 1 – Capacitor Dimensions for Bulk Cassette Packaging – Millimeters

Metric Size Code	EIA Size Code	Length L	Width W	Thickness T	Bandwidth B	Minimum Separation S	Number of Pcs/Cassette
1005	0402	1.0 ± 0.05	0.5 ± 0.05	0.5 ± .05	0.2 to 0.4	0.3	50,000
1608	0603	1.6 ± 0.07	0.8 ± 0.07	0.8 ± .07	0.2 to 0.5	0.7	15,000
2012	0805	2.0 ± 0.10	1.25 ± 0.10	0.6 ± .10	0.5 to 0.75	0.75	10,000

Terminations: KEMET nickel barrier layer with a tin overplate.

CAPACITOR MARKING TABLE (Marking Optional - Not Available for 0402 Size or Y5V Dielectric)

Alpha Character \ Numeral	Capacitance (pF) For Various Numeral Identifiers								
	9	0	1	2	3	4	5	6	7
A	0.10	1.0	10	100	1000	10,000	100,000	1,000,000	10,000,000
B	0.11	1.1	11	110	1100	11,000	110,000	1,100,000	11,000,000
C	0.12	1.2	12	120	1200	12,000	120,000	1,200,000	12,000,000
D	0.13	1.3	13	130	1300	13,000	130,000	1,300,000	13,000,000
E	0.15	1.5	15	150	1500	15,000	150,000	1,500,000	15,000,000
F	0.16	1.6	16	160	1600	16,000	160,000	1,600,000	16,000,000
G	0.18	1.8	18	180	1800	18,000	180,000	1,800,000	18,000,000
H	0.20	2.0	20	200	2000	20,000	200,000	2,000,000	20,000,000
J	0.22	2.2	22	220	2200	22,000	220,000	2,200,000	22,000,000
K	0.24	2.4	24	240	2400	24,000	240,000	2,400,000	24,000,000
L	0.27	2.7	27	270	2700	27,000	270,000	2,700,000	27,000,000
M	0.30	3.0	30	300	3000	30,000	300,000	3,000,000	30,000,000
N	0.33	3.3	33	330	3300	33,000	330,000	3,300,000	33,000,000
P	0.36	3.6	36	360	3600	36,000	360,000	3,600,000	36,000,000
Q	0.39	3.9	39	390	3900	39,000	390,000	3,900,000	39,000,000
R	0.43	4.3	43	430	4300	43,000	430,000	4,300,000	43,000,000
S	0.47	4.7	47	470	4700	47,000	470,000	4,700,000	47,000,000
T	0.51	5.1	51	510	5100	51,000	510,000	5,100,000	51,000,000
U	0.56	5.6	56	560	5600	56,000	560,000	5,600,000	56,000,000
V	0.62	6.2	62	620	6200	62,000	620,000	6,200,000	62,000,000
W	0.68	6.8	68	680	6800	68,000	680,000	6,800,000	68,000,000
X	0.75	7.5	75	750	7500	75,000	750,000	7,500,000	75,000,000
Y	0.82	8.2	82	820	8200	82,000	820,000	8,200,000	82,000,000
Z	0.91	9.1	91	910	9100	91,000	910,000	9,100,000	91,000,000
a	0.25	2.5	25	250	2500	25,000	250,000	2,500,000	25,000,000
b	0.35	3.5	35	350	3500	35,000	350,000	3,500,000	35,000,000
d	0.40	4.0	40	400	4000	40,000	400,000	4,000,000	40,000,000
e	0.45	4.5	45	450	4500	45,000	450,000	4,500,000	45,000,000
f	0.50	5.0	50	500	5000	50,000	500,000	5,000,000	50,000,000
m	0.60	6.0	60	600	6000	60,000	600,000	6,000,000	60,000,000
n	0.70	7.0	70	700	7000	70,000	700,000	7,000,000	70,000,000
t	0.80	8.0	80	800	8000	80,000	800,000	8,000,000	80,000,000
y	0.90	9.0	90	900	9000	90,000	900,000	9,000,000	90,000,000

Laser marking is available as an extra-cost option for most KEMET ceramic chips. Such marking is two sided, and includes a $\overline{K}$ to identify KEMET, followed by two characters (per EIA-198 - see table below) to identify the capacitance value. Note that marking is not available for size 0402 nor for any Y5V chip. In addition, the 0603 marking option is limited to the $\overline{K}$ only.

	$\overline{K}$A3	

Example shown is 1,000 pF capacitor.

©KEMET Electronics Corporation, P.O. Box 5928, Greenville, S.C. 29606, (864) 963-6300

Downloaded from Elcodis.com electronic components distributor