MICRO SWITCH
FREEPORT ILLINOIS U.S.A.
A DIVISION OF HONEYWELL
FED MFG CODE 91929

SWITCH – ENCLOSED

CATALOG LISTING
121EN93-2

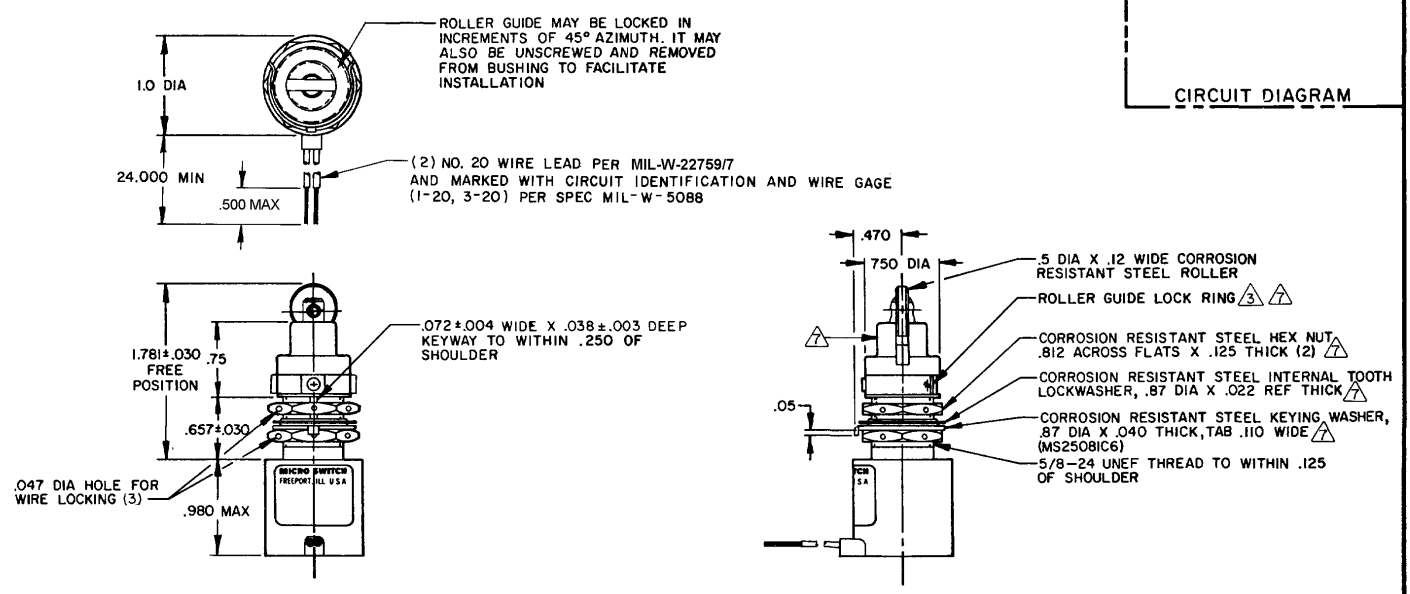

NOTES
1 - CORROSION RESISTANT STEEL ENCLOSURE
2 - SWITCH SEALED PER MIL-PRF-8805 SYMBOL 4
3 TO ADJUST ROLLER DIRECTION REMOVE ROLLER GUIDE LOCK RING, SCREW ROLLER GUIDE DOWN AS FAR AS POSSIBLE, THEN UNSCREW TO DESIRED DIRECTION. SECURE BY REPLACING ROLLER GUIDE LOCK RING
4 - NOTED ELECTRICAL RATINGS APPLY AS SPECIFIED IN MIL-PRF-8805/43 UP TO 185°F
5 - CIRCUIT DIAGRAM, CATALOG LISTING, AND DATE CODE ARE SHOWN ON NAMEPLATE
6 - REPLACEMENT LOCK RING - PACKET 15PA137
7 - HARDWARE MAY BE PACKAGED UNASSEMBLED PER MIL-PRF-8805

THIS DRAWING COVERS A PROPRIETARY ITEM AND IS THE PROPERTY OF MICRO SWITCH, A DIVISION OF HONEYWELL. THIS DRAWING IS NOT TO BE COPIED OR USED WITHOUT THE APPROVAL OF MICRO SWITCH

THIRD ANGLE PROJECTION

SCALE FULL

DO NOT SCALE PRINT

TOLERANCES
APPLY TO DESIGN UNITS. CONVERSIONS ARE ONLY FOR REFERENCE. UNLESS NOTED TOLERANCES ARE ±

	DIM mm	TOL mm/in	DIM in	TOL mm/in
NO PLACES	X	1/64		
ONE PLACE	X X	0.4/.015	X X	0.8/.03
TWO PLACES	X XX	0.15/.005	X XX	0.38/.015
THREE PLACES			X XXX	0.13/.005
ANGLES				

DESIGN UNITS: SI METRIC ☐ US CUSTOMARY ■

RAW MATERIAL—COMMERCIAL STANDARD
MICRO SWITCH STANDARDS APPLY

DIMENSIONS ARE TO BE MET BEFORE PROTECTIVE COATINGS ARE APPLIED

WEIGHT 4.7 OZ MAX

CHARACTERISTICS

OPERATING FORCE	6-12 LB
FULL OVERTRAVEL FORCE	30 LB MAX
RELEASE FORCE	4 LB MIN
PRETRAVEL	.040 MAX
DIFFERENTIAL TRAVEL	020 MAX
OVERTRAVEL	.250 MIN

ELECTRICAL DATA

CONTACT ARRANGEMENT
SPDT (2)

LOAD	28 VDC SEA LEVEL	28 VDC 50,000 FT.
RES	4	4
IND	2	2
MOTOR	4	
LAMP		

CATALOG LISTING 121EN93-2 PAGE 1 OF 1
M
DRAWING NUMBER
ISSUE 20
RELEASE NO. SR-10642
REPLACES
CHECK
REVISIONS
A C044351 WJB 12 FEB 80
B C047573 PART 4 RJH 14 AUG 80
C CO 57370 WJM 14 MAY 85
D CO 67176 MAM 20 APR 90
E C074101 GJW 30 JAN 93
F CO 77304B SAD 16 MAY 94
G 201514 CSL 24 OCT 00
H 0006608 KR 21JUL04
21JUL04 AK 14 FEB 80 CEB 12 FEB 80 WJM
RASTER FO-52851-A

Downloaded from Elcodis.com electronic components distributor