Dimensions: mm (In.)

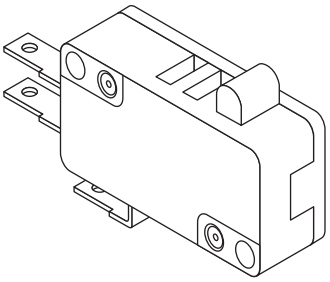

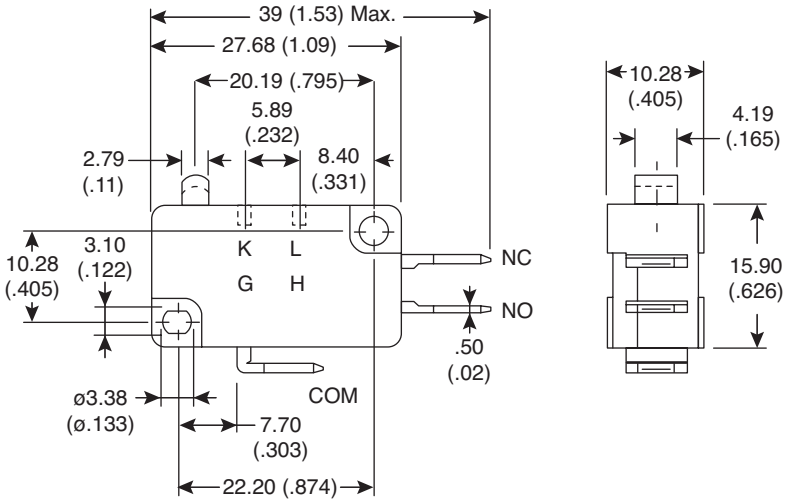

Contact Configuration

S.P.D.T.

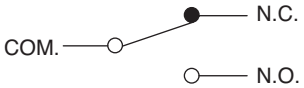

Mounting Holes

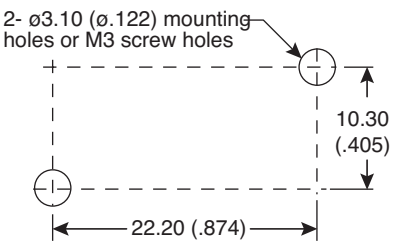

Operating Characteristics

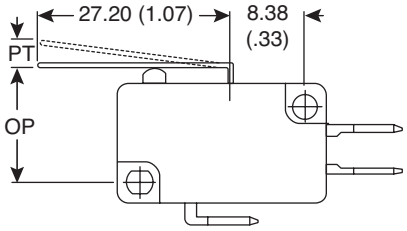

Terminal Type

Quick connect terminal 187 series

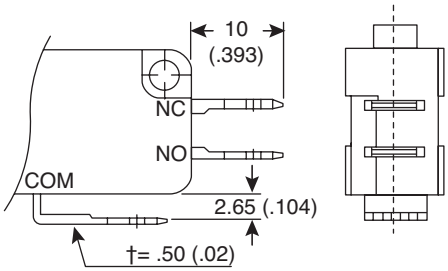

Electrical Specifications:

- Rating: 3A/125-250 VAC
- Insulation Resistance (at 500VDC): 100MΩ Min.
- Dielectric Strength: 1,000VAC RMS (50-60HZ)
- Contact Resistance (initial): 30mΩ, 100mΩ Max.
- Electrical Operating Frequency: 10~30 operations/min
- Electrical Life: 6,000~100,000 operations

Mechanical Specifications:

- Mechanical Operating Frequency: 300 operations/min
- Mechanical Life: 5,000,000~ 10,000,000 operations

Note:

- RoHS Compliant and process compatible with 260° solder

Operating Characteristics:

- OF Max. (g): 37
- OP (mm): 15.3±1.5
- PT Max. (mm): 3.18
- OT Min. (mm): 1.60
- MD Max. (mm): 0.76

Miniature Snap Switch

101-21-03-037ST-EV

Mountain Switch

Available from Mouser Electronics www.mouser.com 1-800-346-6873

Specifications are subject to change without notice. No liability or warranty implied by this information. Environmental compliance based on producer documentation.

Downloaded from Elcodis.com electronic components distributor