MICRO SWITCH
a Honeywell Division
FED. MFG. CODE 91929

SWITCH - ENCLOSED

CATALOG LISTING
BZF1-2RN2-LH
(LEFT HAND)

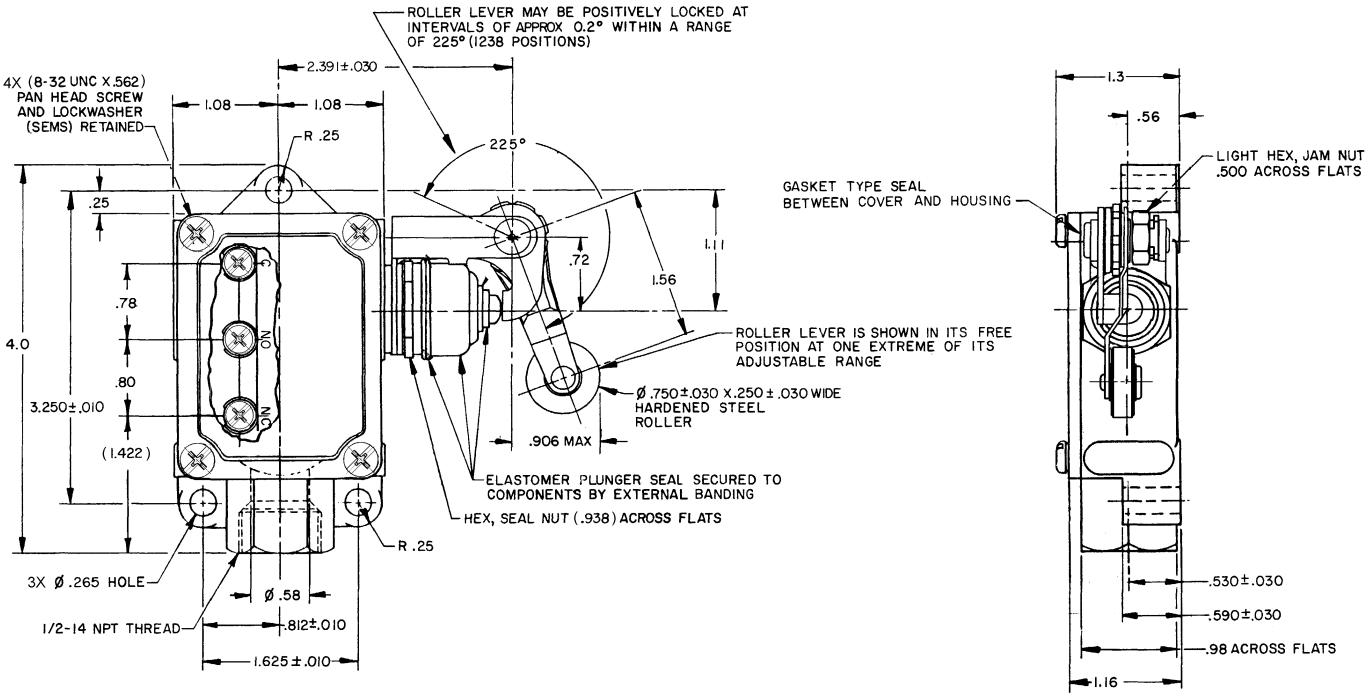

THIS DRAWING COVERS A PROPRIETARY ITEM AND IS THE PROPERTY OF MICRO SWITCH, A DIVISION OF HONEYWELL. THIS DRAWING IS NOT TO BE COPIED OR USED WITHOUT THE APPROVAL OF MICRO SWITCH

THIRD ANGLE PROJECTION

CHARACTERISTICS	ELECTRICAL DATA
OPERATING FORCE ——— 2 LB MAX	CONTACT ARRANGEMENT S P D T
RELEASE FORCE ——— 1/4 LB MIN	-L96- 15 A-125, 250, OR 480 VAC; 1/2 A-125 VDC; 1/4 A-250 VDC; 1/8 HP-125 VAC; 1/4 HP-250 VAC
PRETRAVEL ——— .219 MAX	
DIFFERENTIAL TRAVEL ——— .008 MAX	
OVERTRAVEL ——— .219 MIN	
BASIC SWITCH REPLACEMENT BZ-2R708-P7	

SCALE FULL

DO NOT SCALE PRINT

UNLESS OTHERWISE SPECIFIED TOLERANCES ARE

ONE PLACE	(.0)	±.030
TWO PLACE	(.00)	±.015
THREE PLACE	(.000)	±.005
ANGLES		±

WEIGHT .670 LB

NOTES
1 - ROLLER LEVER BRACKET ASSEMBLY MAY BE SET IN ANY POSITION AROUND AXIS OF PLUNGER
2 - 8-32 UNC X (.219) BINDER HEAD, COMBINATION, TERMINAL SCREWS AND CUPWASHERS

CATALOG LISTING BZF1-2RN2-LH
PAGE 1 OF 1
ISSUE 19
REPLACES
RELEASE NO.
CHECK

REVISIONS
A CO-73287M GJW 16 MAY 95
B C0081938 LAK 6 MAR 97
C 0063051 LK 01APR10

CMH 01APR10
CHECK
25 MAY 95
JJA
CHECK
16 MAY 95
GJW
DRAWN
RASTER

Downloaded from Elcodis.com electronic components distributor